TM-097
2nd PRINTING

Operation, Maintenance and Service Manual

Complete with Illustrated Parts Catalog

GAME SERIAL NUMBER LOCATION

Your game's serial number is stamped on the circuit (back) side, bottom right corner, of the printed circuit board—see the illustration below. The *same* number is also stamped on the TV monitor chassis and on the label located on the rear of the game cabinet. Please mention this number whenever calling your distributor for service.

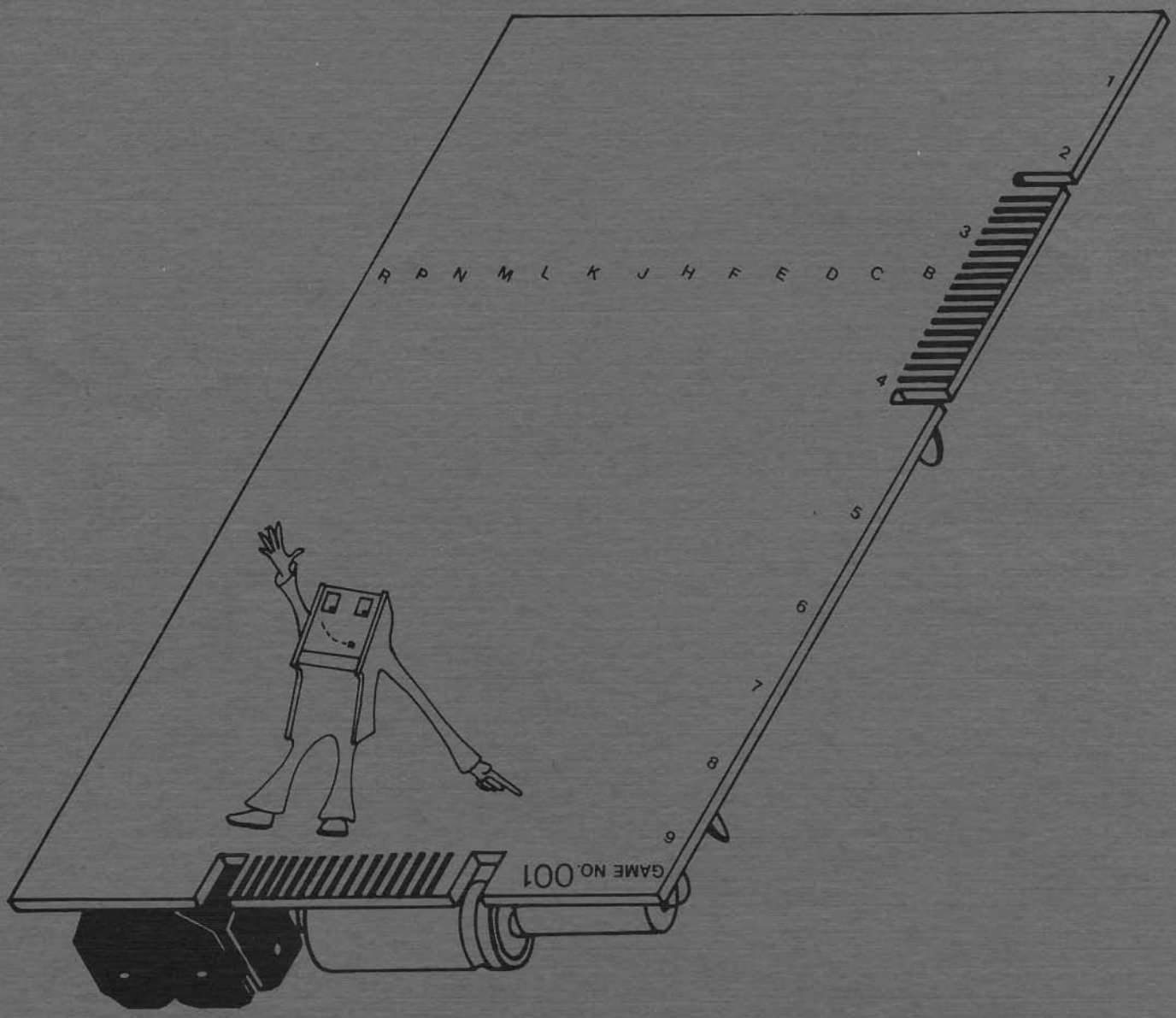

Canyon Bomber™

Operation, Maintenance and Service Manual

Complete with Illustrated Parts Catalog

ATARI INC
1265 BORREGAS AVENUE
P.O. BOX 9027
SUNNYVALE, CALIFORNIA 94086
408/745-2000 • TELEX 35-7488

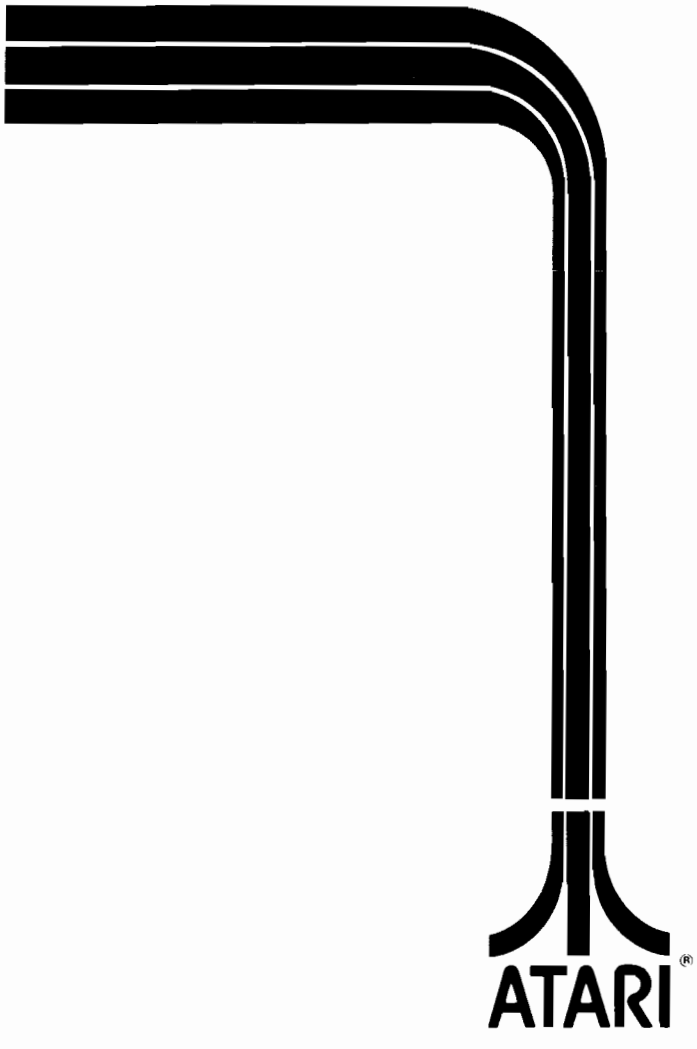

A Warner Communications Company

All rights reserved. Copyright © 1977 by Atari, Inc.
No part of this publication may be reproduced by any mechanical, photographic, or electronic process, or in the form of a phonographic recording, nor may it be stored in a retrieval system, transmitted, or otherwise copied for public or private use, without permission from the publisher.

For permission requests, write:

ATARI INC
1265 BORREGAS AVENUE
P.O. BOX 9027
SUNNYVALE, CALIFORNIA 94086

11F

Lithographed in the U.S.A.

TABLE OF CONTENTS

1 LOCATION SETUP

A. INTRODUCTION 1
Game Operation 1
Owner Options and Self-Test 2
Physical Description 2
B. GAME INSPECTION 2
C. INSTALLATION REQUIREMENTS 2
Power Requirements and Line Voltage Selection 2
Temperature Range 2
Humidity 2
Location Space Requirements 2
Type of Power Cord 2
D. INTERLOCK AND POWER ON/OFF SWITCHES 2
E. OPERATOR OPTIONS 3
F. SELF-TEST PROCEDURE 5
G. VOLUME CONTROL 6

2 GAME PLAY

A. ATTRACT MODE 7
B. READY-TO-PLAY MODE 8
C. PLAY MODE 8

3 MAINTENANCE AND ADJUSTMENTS

A. CLEANING 10
B. COIN MECHANISM 10
Components on Coin Door 10
Access to Coin Mechanisms 10
Cleaning of Coin Paths 11
Adjustment of Coin Switch Trip Wire 12
Mechanical Adjustments on Coin Mechanism 12
General Troubleshooting Hints 14
C. FUSE REPLACEMENT 14
D. LAMP REPLACEMENT 14
Fluorescent Lamp Replacement Procedure 14
Fire Button Replacement Procedure 14
E. TV MONITOR REMOVAL 14
F. TV MONITOR ADJUSTMENTS 14
G. LED START SWITCH REPLACEMENT 16

4 THEORY OF OPERATION

A. GENERAL INFORMATION 17
B. COMPONENTS OF THE MICROCOMPUTER SYSTEM 18
Program Memory 20
Read/Write Memory 20
Microprocessing Unit 20
Tri-State Devices 20

TABLE OF CONTENTS

C. *MICROCOMPUTER SYSTEM* 20
Program Memory Enable 20
RAM ENABLE 20
Phase 1 and Phase 2 20
RAM Output 21
D. *MICROCOMPUTER WATCHDOG* 21
E. *COMPONENTS OF CANYON BOMBER GAME CIRCUITRY* 21
System Clock and Sync Generator 22
Playfield Generator 22
Motion Generator 23
Video Output 24
Manual Control Interface 24
Motor Generator 24
Whistle Generator 27
Audio Output 27

5 ILLUSTRATED PARTS CATALOG

LIST OF ILLUSTRATIONS

Figure 1-1 Location of Voltage-Changing Plug 3
Figure 1-2 Location of On/Off, Interlock, and Self-Test Switches 4
Figure 1-3 Location of Volume Adjustment 6
Figure 2-1 Attract Mode 8
Figure 2-2 Ready-To-Play Mode 8
Figure 2-3 Play Mode 8
Figure 3-1 Coin Door Assembly 10
Figure 3-2 Hinging Open the Magnet Gate Assembly 10
Figure 3-3 Removal of Coin Mechanism 11
Figure 3-4 Surfaces to Clean Inside the Coin Mechanism 11
Figure 3-5 Removal of Plate Covering Rear of Coin Slot 11
Figure 3-6 Close-Up View of Lubrication Point 12
Figure 3-7 Detail View of Coin Switch and Trip Wire 12
Figure 3-8 Securing the Coin Switch Trip Wire 12
Figure 3-9 Adjustments on Coin Mechanism 13
Figure 3-10 Lamp and TV Monitor Removal 15
Figure 3-11 Locations of Adjustments on TV Chassis 16
Figure 3-12 LED Start Switch Replacement 16
Figure 4-1 Game Block Diagram 18
Figure 4-2 Canyon Bomber PCB Block Diagram 19
Figure 4-3 Phase 1 and Phase 2 Signal Shaping 21
Figure 4-4 RAM Write Enable Signal Shaping 22
Figure 4-5 Playfield Generator Character Trace for the Letter "C" 22
Figure 4-6 TV Monitor Display 23
Figure 4-7 TV Monitor Schematics 25
Figure 4-8 Canyon Bomber Schematic Diagram (5 sheets) 28
Figure 4-9 Harness Schematic 38

ILLUSTRATED PARTS CATALOG

Figure 5-1 Canyon Bomber Final Assembly 40
Figure 5-2 Power Supply Assembly 44
Figure 5-3 Control Panel Assembly 46
Figure 5-4 Fire Button Assembly 48
Figure 5-5 Fluorescent Light Assembly 50
Figure 5-6 TV Shelf Assembly 52
Figure 5-7 Coin Door Assembly 54
Figure 5-8 RF Shield PCB Assembly 56
Figure 5-9 Canyon Bomber PCB Assembly 58

LIST OF TABLES

Table 1-1 *Operator Options* 5
Table 1-2 *Self-Test Procedure* 5
Table 4-1 *Approximate Base Voltage of Transistor Q1 and Q2 for Given Address* 24

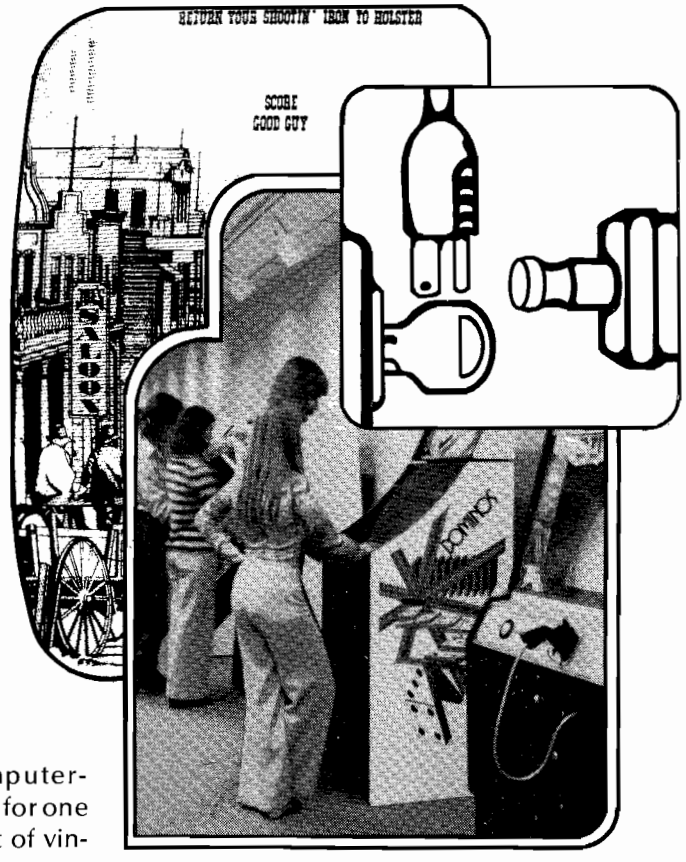

A. INTRODUCTION

Game Operation

Atari's Canyon Bomber™ is a computer-controlled, black-and-white TV monitor game for one or two players. The game simulates the flight of vintage warplanes and blimps in bombing runs across a canyon filled with targets. The targets are hundreds of bubbles, each displaying a point value from one through four. The player controls a bomb release from his or her aircraft. The altitude is controlled by the computer and varies at random with each bomb run. Falling bombs and detonations are accompanied by realistic sound effects while targets are destroyed to a depth of four to eight layers.

1 LOCATION SETUP

As targets are destroyed, accumulated points are displayed and gaps develop in the target area. If a bomb falls into a gap or outside the canyon, a miss is registered. A miss is also registered if no bomb is dropped during the pass of an aircraft. Game play ends when each player accumulates a certain number of misses. During play, the number of misses remaining is continuously displayed. The miss limit can be three, four, five, or six, as selected by internal switches. The object of the game is to destroy all targets before reaching the miss limit. If all targets are destroyed, the canyon is refilled with targets, play continues, and the remaining misses stay the same. The canyon can be refilled a maximum of four times. Game play is described in detail in Chapter 2.

Owner Options and Self-Test

In addition to permitting the selection of miss limits, internal switches provide for selecting the number of coins per player and for the display language (English, French, German, or Spanish). A self-test feature permits a quick check of all controls the TV monitor, and related circuits. Tables 1-1 and 1-2 in this chapter direct the option-select and self-test procedures.

Physical Description

Major components of the game are the TV monitor, printed circuit board (game PCB), power supply, coin mechanisms, and coin box. The TV monitor is accessible for adjustments through a removable service panel, secured by four screws and located at the rear of the monitor compartment of the cabinet. The TV monitor is removable from the front. (Refer to Figure 3-10 in Chapter 3.) All other major components are accessible through the rear door, which has an interlock switch that disables AC power input. The coin door permits access to the self-test switch as well as to the coin mechanisms and coin box.

The PCB fits into a shielded enclosure. The PCB connector is secured to a removable end plate (RF or radio frequency shield) of the enclosure, and is hard-wired to the harness. The PCB is accessible when the RF shield is removed. The RF shield is secured by ten screws. The option switches and volume controls are located on the PCB. A power switch is located on the top right side of the cabinet. The switch permits power to be shut down without opening the cabinet or pulling the power cord from the outlet.

B. GAME INSPECTION

Examine the game carefully for evidence of any shipping damage. Check the outside of the cabinet for dents, chips, or broken parts. Open the rear access door and check for anything that appears broken or out of place.

C. INSTALLATION REQUIREMENTS

Power Requirements and Line Voltage Selection (See Figure 1-1)

The game is shipped for operation at 110 VAC, 60 Hz. Power consumption is approximately 150 watts. At the power supply, line voltage operation is determined by selecting one of four connectors and plugging it into the voltage selection socket. Figure 1-1 shows the four connectors, with one of them plugged in. The plugs are identified by wire color as listed in Figure 1-1. Note that there are two basic operating voltages—110 VAC, 60 Hz and 220 VAC, 50 Hz, with provisions for low line voltage in each case. To insure proper operation, measure line voltage. If voltage is below 100 V (for 110 VAC lines) or below 210 V (for 220 VAC lines), use the low voltage connections.

Temperature Range

Operation or storage—32° to 120° Fahrenheit (0° to 49° Celsius)

Humidity

Operation or storage—95% maximum, with no condensation

Location Space Requirements

Vertical Clearance—185 centimeters (73 inches)
Width—75 centimeters (29.5 inches)
Depth Clearance, including Player Space—61 centimeters (24 inches)

Type of Power Cord

Atari has added a strain relief power cord to Canyon Bomber. The advantage of this type of power cord is that, if pulled accidentally, the strain relief will hold the cord in place at the cabinet wall. The plastic strain relief "cushions" the impact of the shock and prevents the cord from pulling the wires out of the harness connector.

D. INTERLOCK AND POWER ON/OFF SWITCHES

To minimize the hazard of electrical shock while you are working inside the game cabinet, an interlock switch has been installed at the rear access door. This

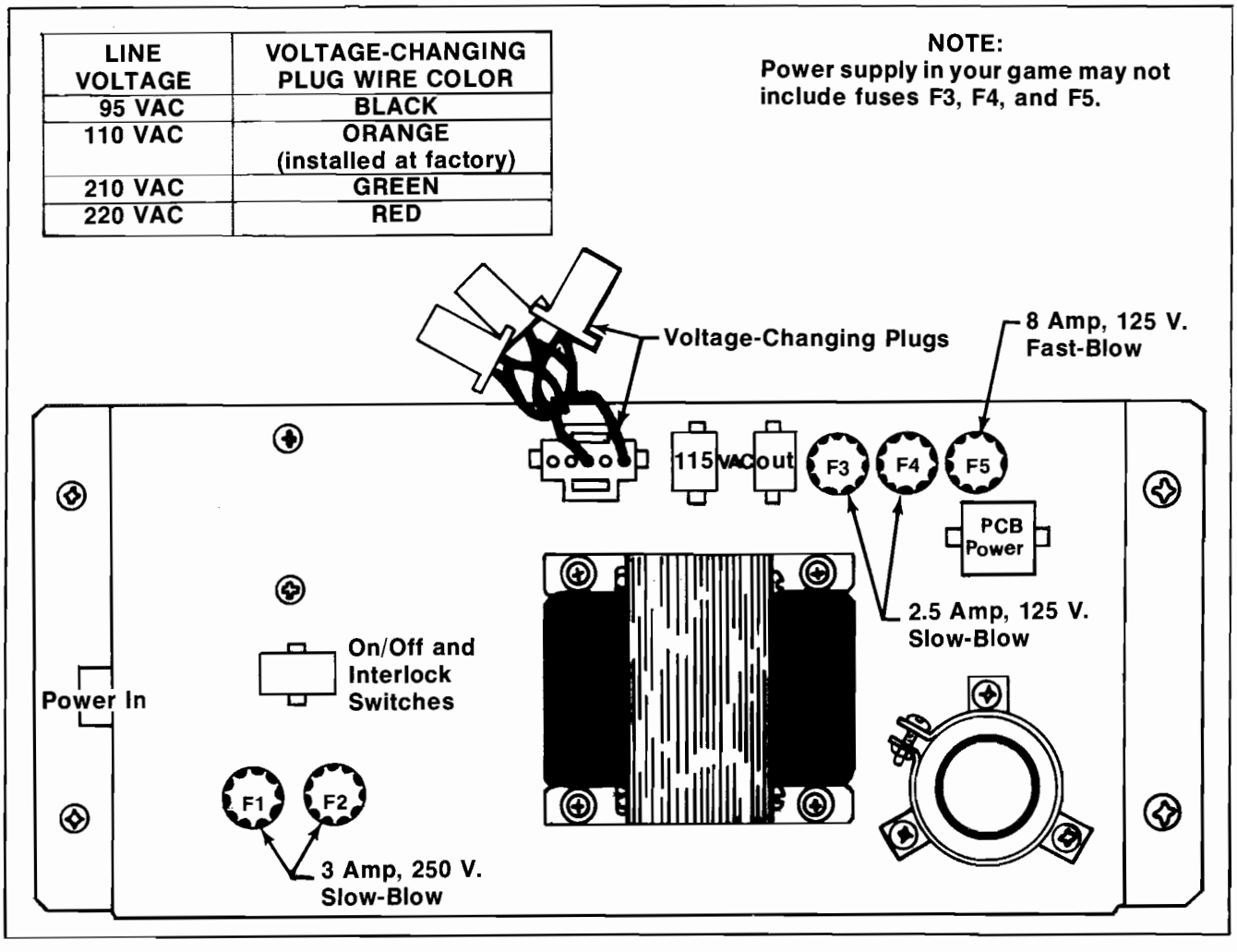

Figure 1-1 Location of Voltage-Changing Plug

switch removes all power from the game while the access door is open.

To help you conserve energy, a power on/off switch has been installed on the Canyon Bomber game so that it can be turned off during closed periods. Refer to Figure 1-2 for switch locations.

Please check for proper operation of the rear access door interlock switch by performing the following steps:

1. Unlock and open the rear access door.
2. Plug the AC power cord into a power source (wall plug).
3. Set the power on/off switch to the *on* position.
4. Close the rear access door. Within approximately 30 seconds the TV monitor should display a picture.
5. Slowly open the rear access door until the picture on the TV monitor disappears. The picture should disappear when the rear access door is opened less than one inch from the top.
6. If the results of Step 5 are satisfactory, the interlock switch is operating properly. If the picture does not disappear as described, check to see if the switch is broken from its mounting or stuck in the *on* position.
7. Close and lock the rear access door.

E. OPERATOR OPTIONS

Options of the Canyon Bomber game offer the operator maximum player appeal for each game loca-

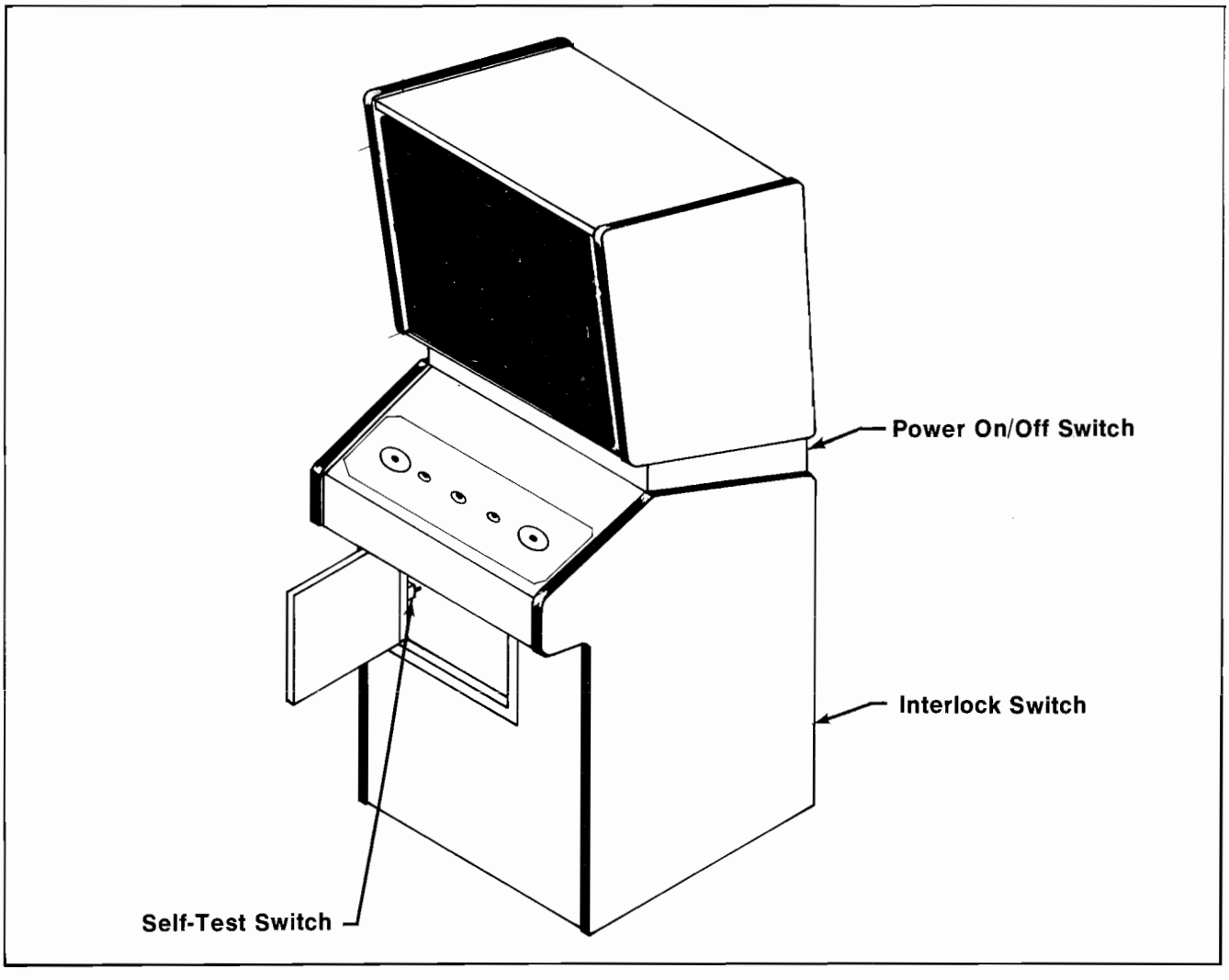

Figure 1-2 Location of On/Off, Interlock, and Self-Test Switches

tion. These options are listed in Table 1-1. They are preset for a certain game structure while being manufactured. To determine how the switches have been set for your game, check the viewing screen during the attract mode, and compare with the information in Table 1-1.

In order to change the toggle positions of the switch assembly and thus set the desired options, the printed circuit board (PCB) must be removed according to the following procedure:

1. Unplug the game. Unlock and open the rear access door.

2. Locate the RF shield assembly immediately inside the cabinet on the right. (It is an aluminum box with small holes.) On one end of the box is a printed circuit board with an edge connector coming from the edge of the board. This printed circuit board is the RF shield assembly.

3. Remove the five pan-head Phillips screws from each of the long sides (total of ten screws) of the RF shield assembly.

   IMPORTANT: To prevent damage to the capacitors on the rear side of this PCB, move the board about ¼" towards the edge connector (same direction as two arrows on small white label). *Then* pull the RF board out towards you. *Never* yank the RF board straight out of the metal box.

4. Carefully remove the PCB from the RF shield assembly.

Table 1-1 Operator Options

Option	Switch Settings 8	7	6	5	2	1	Result
Game Cost	OFF	ON					One Coin Per Player
	OFF	OFF					Two Coins Per Player
	ON	OFF					Two Players Per Coin
	ON	ON					Free Play
Misses Per Play			ON	ON			Three
			ON	OFF			Four
			OFF	ON			Five
			OFF	OFF			Six
Language					ON	ON	English
					OFF	ON	French
					ON	OFF	Spanish
					OFF	OFF	German

Note: Switches 3 and 4 are not used.

5. Set the switches for the desired options, as shown in Table 1. (Note that switches 3 and 4 are not used.)
6. Reinstall the PCB following steps 1 through 4 in reverse order. Do not force or bend the printed circuit board. Before reinstalling, always inspect the printed circuit board for damage. Close and lock the rear access door.
7. Plug in the game and verfiy option functions by playing it.

F. SELF-TEST PROCEDURE (See Table 1-2)

The self-test procedure permits you to check the TV monitor, the character-generating and sync circuits, and the controls. The procedure uses the TV monitor itself and the speakers; no additional equipment is required. We suggest that you run the self-test each time the coin box is emptied.

Table 1-2 Self-Test Procedure

Test	Instruction	Results if Test Passes	Results if Test Fails
1	Unlock and open Coin Door. Set self-test slide switch (located inside and at center of the Coin Door) to the *on* position.	TV monitor displays the entire character set in a repeating black and white pattern.	Character set is not displayed on TV monitor.
2	Press all player control buttons individually (including coin switches, fire buttons, LED switches, and RESET button).	Falling-bomb sound should be produced for each operation of a button. If test Step 1 was normal and only one control fails to produce the correct sound, the trouble is probably in that control button.	Absence of falling-bomb sound.
	Close contacts of the coin door slam switch.	Falling-bomb sound should be produced each time the slam switch contacts are closed.	Absence of falling-bomb sound.

G. VOLUME CONTROL

If volume is incorrect for your location, remove the game PCB and adjust the volume control. See Figure 1-3.

There are three modes of operation: attract (power applied), ready-to-play (coins accepted), and play (one or both START buttons pressed).

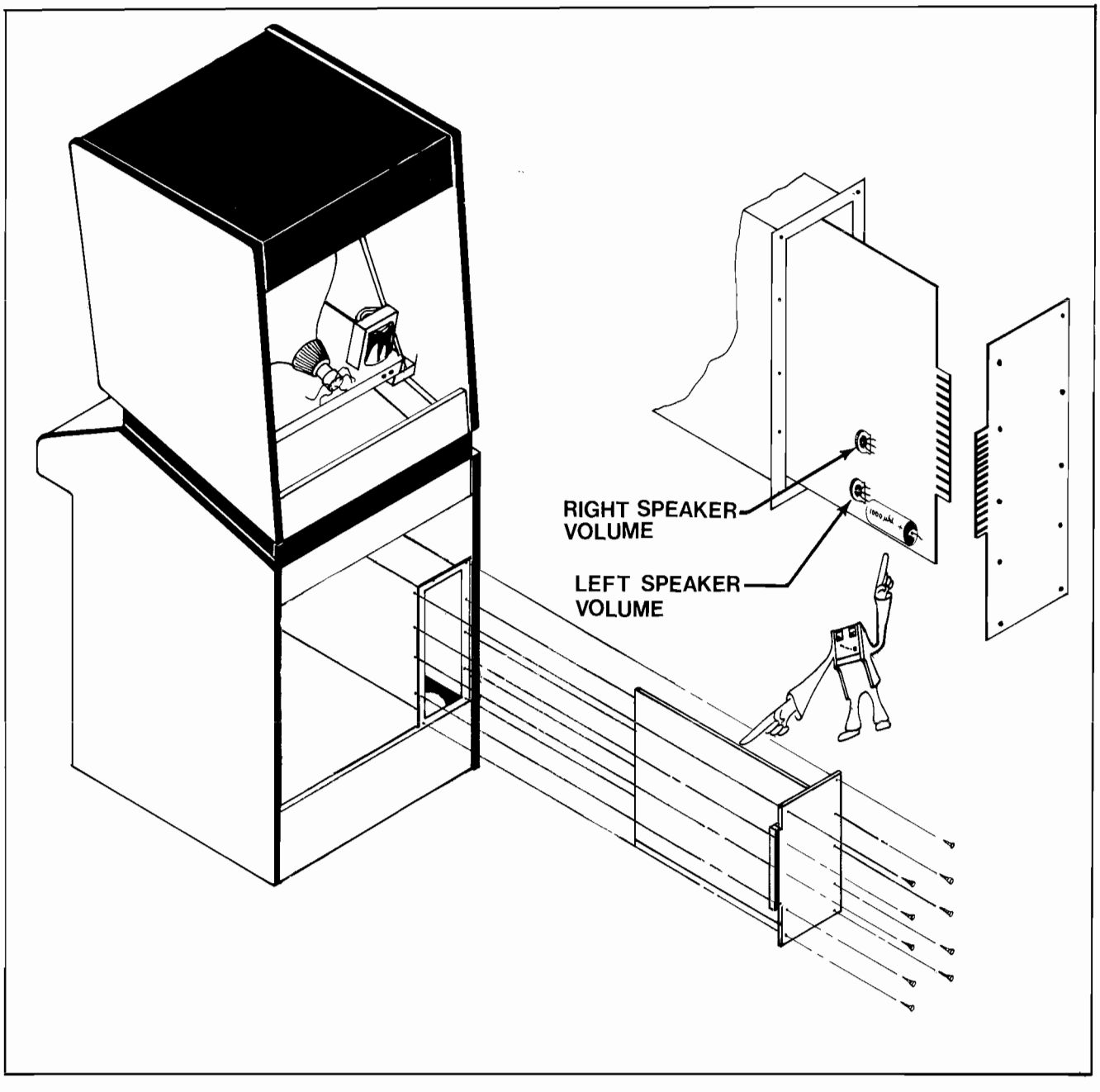

Figure 1-3 Location of Volume Adjustment

A. ATTRACT MODE

In the attract mode, a canyon filled with targets is displayed and the aircraft fly across the screen at random intervals and altitudes. The TV monitor displays a black blimp, eventually replaced by an airplane, and a white blimp, also replaced by an airplane. Across the top of the screen appears BLACK SCORE and HIGH SCORE in black letters and WHITE SCORE and HIGH SCORE in white letters. The black and white scores are the scores of the last game played. Upon initial power-up all scores are zero. The high score displays indicate the highest game score, for that color, that has been recorded since the HIGH SCORE RESET button was set.

A line of information appears in black lettering. The line alternately flashes the coins per play (internally selected), and the misses per play.

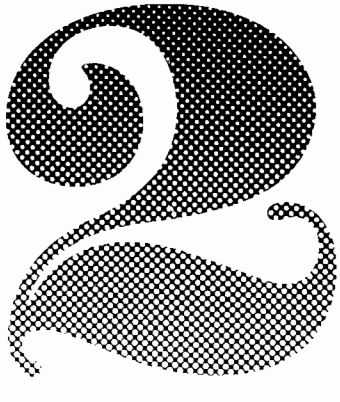

GAME PLAY

B. READY-TO-PLAY MODE

When one coin has been deposited (assuming one coin per player), a second message line reads YOU HAVE 1 CREDIT. This information flashes alternately with another message, PUSH START BUTTON. The number of credits indicated is determined by the number of coins deposited, the coins per player, and the plays remaining. Each player uses one credit per play. A maximum of four coins can be deposited. Either coin slot may be used.

C. PLAY MODE

If one coin has been deposited (assuming one coin per player), the game begins as a single-player game when either START button is pressed. If two or more coins are deposited (in either or both coin slots), a four-second delay (freeze mode) occurs

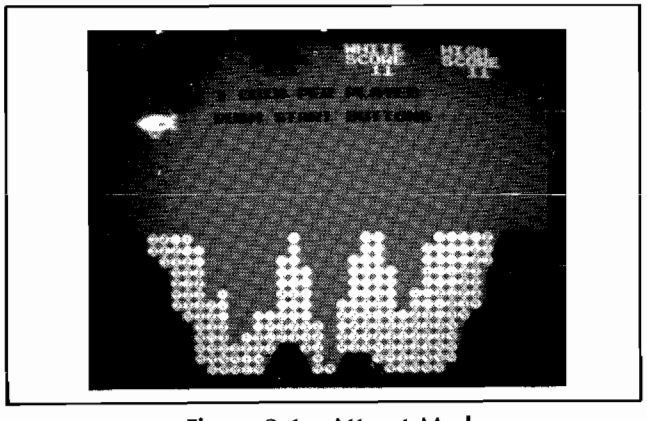

Figure 2-1 Attract Mode

Figure 2-2 Ready-To-Play Mode

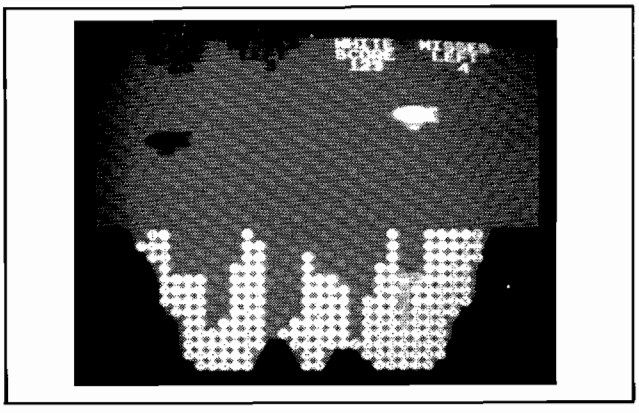

Figure 2-3 Play Mode

when one START button is pressed. If the other START button is pressed within four seconds, the game starts as a two-player game, with each player controlling a bomb release for his or her aircraft. If the other START button is not pressed within four seconds, the game starts as a single-player game. As a single-player game, the player controls the bomb release for the color of aircraft associated with the START button that was activated. The computer controls the other.

Play begins with blimps flying by. After a period of time, planes instead start flying by. (Blimps fly at higher altitudes, but fly slower than the planes.) For either type of aircraft, a bomb must land and explode before another can be released.

Play continues until the miss limit is reached by each player. When there is only one player, the game continues until he or she has reached the miss limit, even though the computer-controlled aircraft might have reached the miss limit. If a player hits all targets in the canyon, the canyon refills with targets, but the remaining misses stay the same. The canyon can be refilled a maximum of four times per game. During play, MISSES LEFT is indicated in place of each HIGH SCORE display. After each game, the HIGH SCORE display returns, indicating the highest game score since power was applied to the unit. The HIGH SCORE RESET button may be used to clear the display to zero.

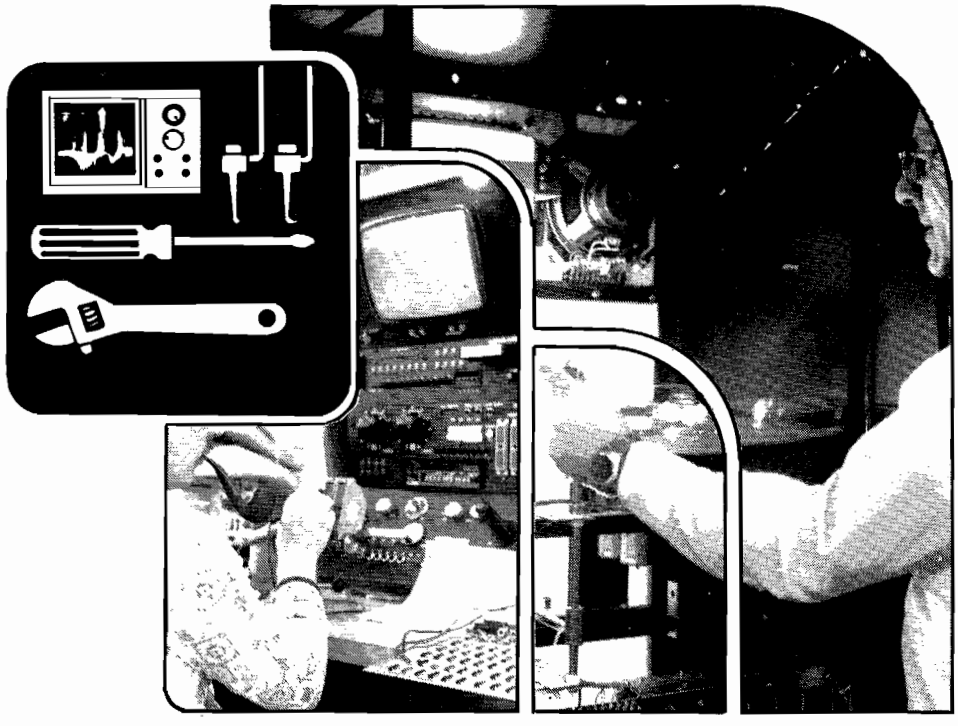

MAINTENANCE AND ADJUSTMENTS

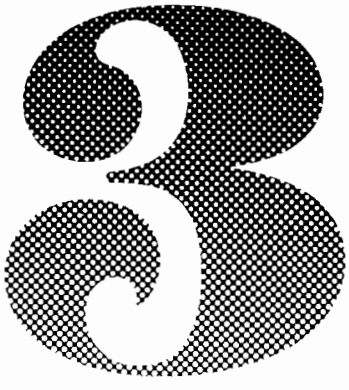

Due to its solid-state electronic circuitry, this Atari unit should require very little maintenance and only occasional adjustment. Information given in this chapter and elsewhere in this manual is intended to cover most servicing situations that may be encountered at the game site. The procedures given are in sufficient detail to be understood by a person with moderate technical background.

NOTE

If reading through this manual does not lead to solving a specific maintenance problem, you can reach Atari's Customer Service Department by telephone Monday through Friday, from 7:30 a.m. to 4 p.m. Pacific Time. From California, Alaska and Hawaii, call (408) 984-1900; from the remaining 47 states call (800) 538-6892 (toll-free).

If you are interested in gaining more information on video game technology, especially the electronics, we recommend reading the Video Game Operator's Handbook, manual number TM-043. This book is available from Atari, Inc., Attn. Customer Service Department, 2175 Martin Avenue, Santa Clara, CA 95050 for $5 each, or from your distributor.

A. CLEANING

The exteriors of game cabinets and plex panels may be cleaned with any non-abrasive household cleaner. If desired, special coin machine cleaners that leave no residue can be obtained from your distributor. Do *not* dry-wipe the plex panels because any dust can scratch the surface and results in fogging the plastic.

B. COIN MECHANISM

Components On Coin Door

Figure 3-1 shows the back side of the coin door assembly where the game's two coin mechanisms are mounted. Included is the lock-out coil assembly; the lock-out wires are connected to this assembly but are hidden behind the coin mechs. During the attract mode the microcomputer energizes the lock-out coil, causing the lock-out wires to retract far enough to allow genuine coins to reach the coin box. But during the ready-to-play mode when the LED is lighted and during the play mode (and also when AC power to the game has been turned off) the lock-out coil is de-energized, causing the lock-out wires to move out far enough to divert coins over to the return chute.

Directly below each coin mechanism is a secondary coin chute and a coin switch with a trip wire extending out to the front edge of the chute. When the trip wire is positioned correctly, a coin passing down the secondary chute and into the coin box will momentarily push the trip wire down and cause the switch contacts to close.

Also shown in the photograph is a slam switch assembly. It has been included to defeat any players who might try to obtain free game plays by violently pounding on the coin door to momentarily close the contacts on a coin switch. The slam switch contacts connect to the microcomputer system, which will ignore coin switch signals whenever the slam switch contacts are closed.

Access To Coin Mechanisms

To remove jammed coins, and for maintenance cleaning, each magnet gate assembly can be hinged open without removing it from the door, as shown in Figure 3-2. Or, if necessary, each coin mechanism can be entirely removed from the door merely by pushing

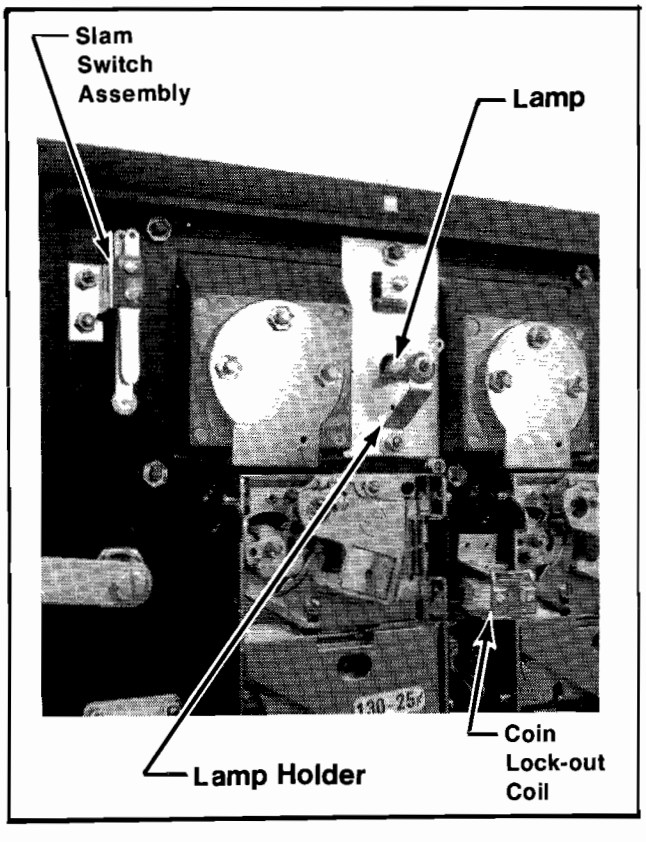

Figure 3-1 Coin Door Assembly

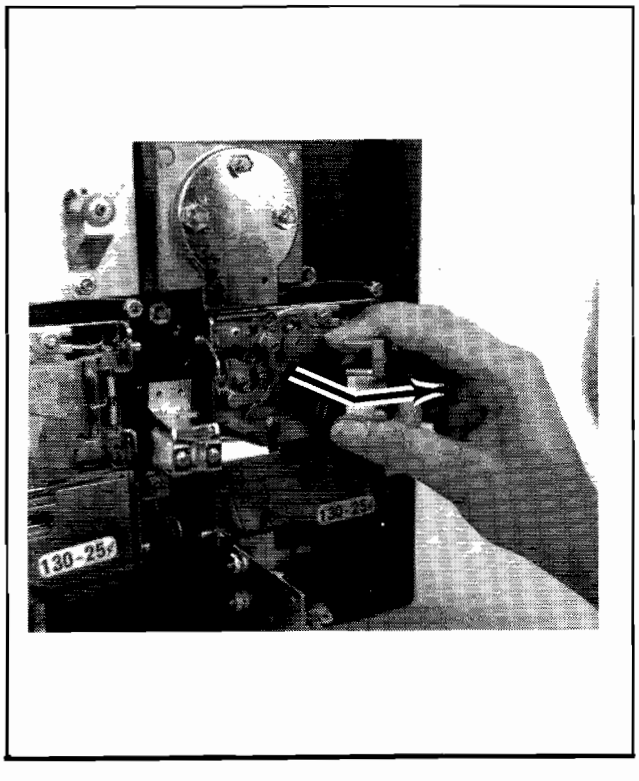

Figure 3-2 Hinging Open the Magnet Gate Assembly

down on a release lever and simultaneously tilting the mechanism back, then lifting it up and out. This is shown in Figure 3-3.

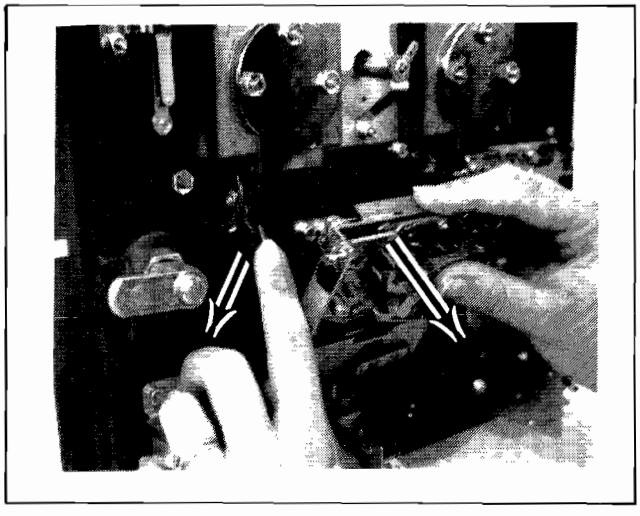

Figure 3-3 Removal of Coin Mechanism

Cleaning of Coin Paths

CAUTION

The use of an abrasive (such as steel wool or a wire brush) or a lubrication on a coin mechanism will result in a rapid build-up of residue.

By talking to many operators, we have found that the best method of cleaning a coin mechanism is by using hot or boiling water and a mild detergent. A toothbrush may be used for those stubborn buildups of residue. After cleaning, flush thoroughly with hot or boiling water, then blow out all water with compressed air.

Figure 3-4 shows the surfaces to clean inside the coin mechanism. These include the inside surface of the mainplate, and the corresponding surface of the gate assembly. There may also be metal particles clinging to the magnet itself. To remove these you can guide the point of a screwdriver or similar tool along the edge of the magnet.

If coins are not traveling as far as the coin mechanisms, you will need to clean the channel beneath the coin slot. To gain access to this channel, use a ⅜-inch wrench and remove all three nuts that secure the cover plate (refer to Figure 3-5). Removing the plate will provide access to the entire channel.

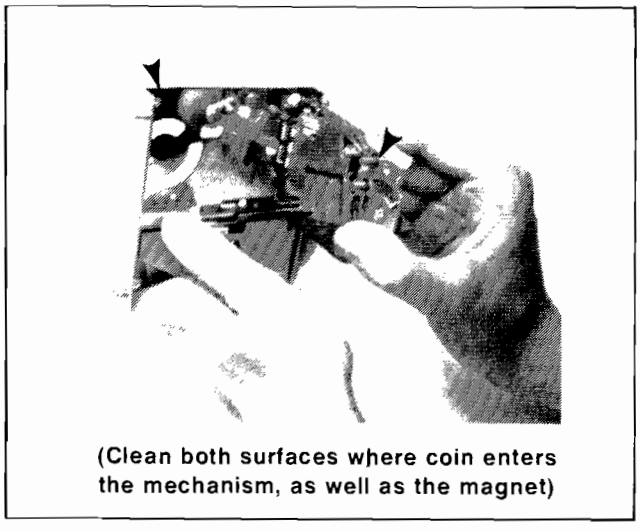

(Clean both surfaces where coin enters the mechanism, as well as the magnet)

Figure 3-4 Surfaces to Clean Inside the Coin Mechanism

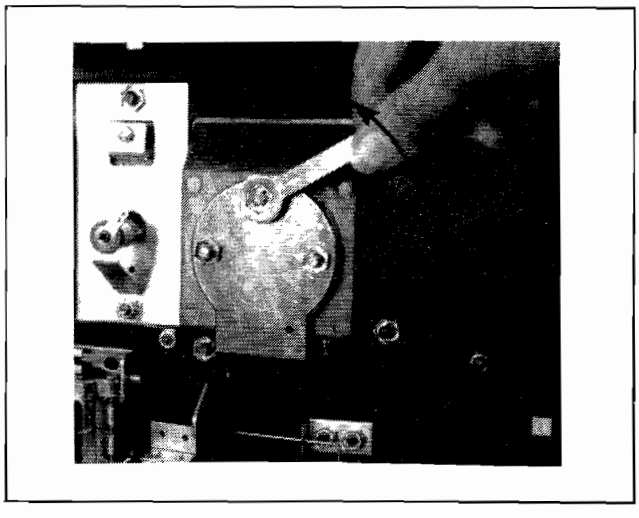

Figure 3-5 Removal of Plate Covering Rear of Coin Slot

Also clean the inside surfaces of the secondary coin chutes, but when doing this be careful not to damage or bend the trip wires on the coin switches.

Lubrication

Do *not* apply lubrication to the coin mechanisms. The only points that may need lubrication (and only rarely) are the shafts of the scavenger buttons (coin rejection buttons) where they pass through the coin door. Apply only one drop of light machine oil, and be positive that no oil drops down onto a coin mechanism. Figure 3-6 shows this lubrication point.

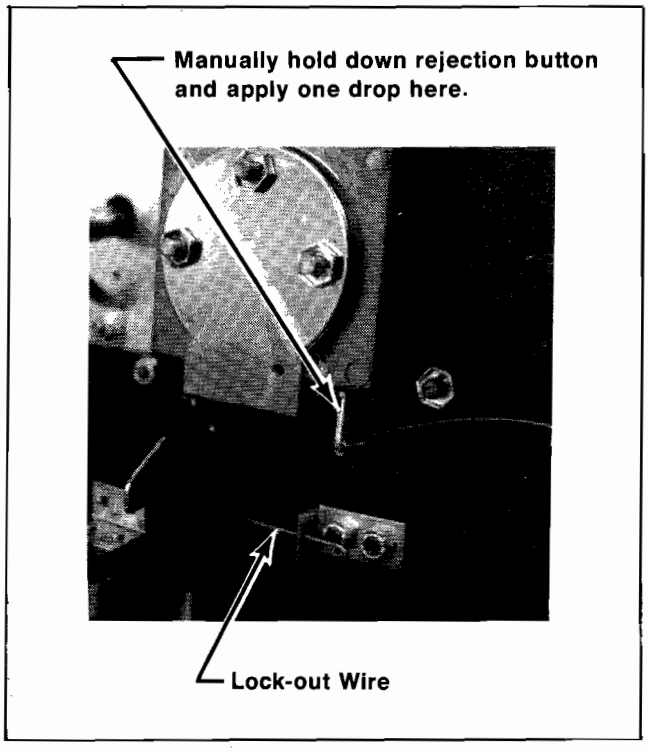

Figure 3-6 Close-Up View of Lubrication Point

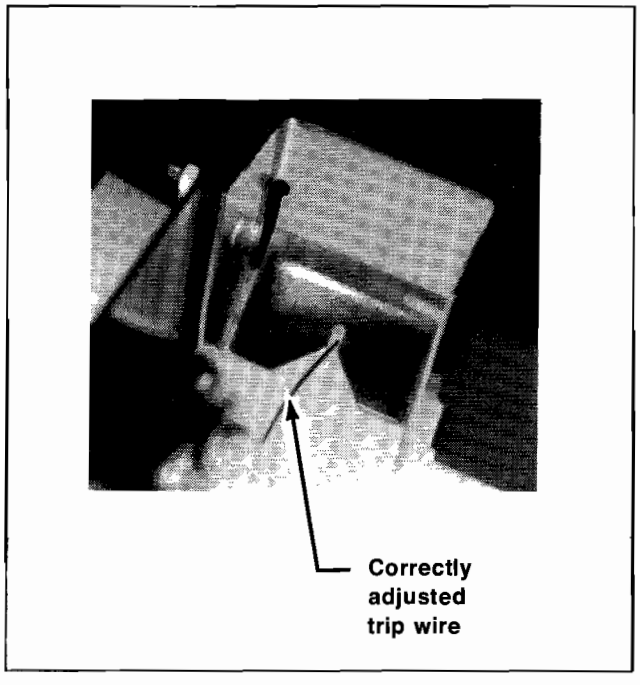

Figure 3-7 Detail View of Coin Switch and Trip Wire

Adjustment of Coin Switch Trip Wire

In order for a coin switch to operate reliably when a coin travels down the secondary coin chute, the rest position of its trip wire should be as shown in Figure 3-7. Use extreme care when handling or touching these wires.

Three problems can occur with trip wires—they can be too long, too short, or become loosened and fall off.

With a wire that is too long, you may have a problem of catching it on the opening in the cash box as a coin is accepted. You can cut off the end of the wire in small increments, making sure it still extends slightly through the "V" of the coin chute.

If the trip wire is too short (either by wrong adjustment or by being cut off too much), coins may slip by the wire without tripping it, and *no* credits will be given. The solution is to carefully bend and straighten out the wire to lengthen it. If you cannot straighten it sufficiently, contact your distributor to order another trip wire.

If the wire is loose and falls off its mounting stud, it will also cause *no* credits to be given. Secure the wire by crimping together both ends of the brass-

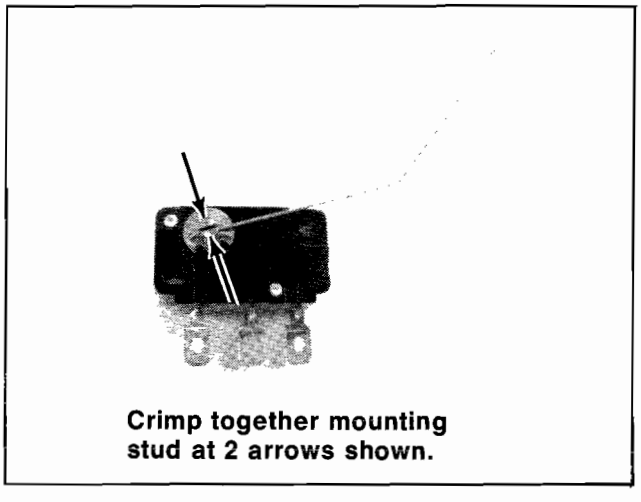

Figure 3-8 Securing the Coin Switch Trip Wire

colored mounting stud with a pair of pliers (see Figure 3-8). If you should ever need to remove the trip wire, the two halves of the mounting stud can be separated with a small screwdriver.

Mechanical Adjustments on Coin Mechanism

Coin mechanisms are adjusted prior to shipment from the factory and normally will retain these adjustments for many months. If, due to wear or other causes, it becomes necessary to make new adjust-

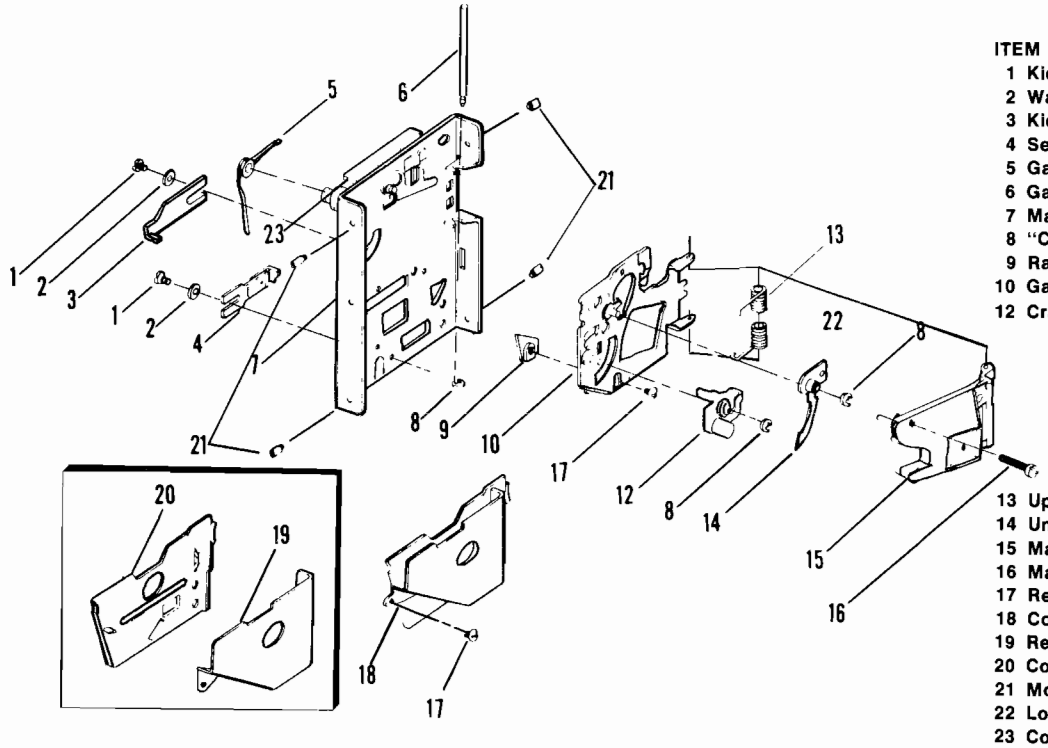

ITEM IDENTIFICATIONS
1 Kicker and Separator Screws
2 Washers
3 Kicker
4 Separator
5 Gate Lever Spring
6 Gate Pivot Pin
7 Mainplate Assembly
8 "C" washer
9 Rail
10 Gate Assembly
12 Cradle Assembly
13 Upper Gate Pivot Spring
14 Undersize Lever Assembly
15 Magnet Gate Assembly
16 Magnet Gate Adjuster
17 Retaining Screws
18 Coverplate Assembly
19 Return Coverplate
20 Coverplate
21 Mounting Studs
22 Lower Gate Pivot Spring
23 Coin Release Lever

Kicker and separator

1. Set the acceptor with the back of the unit facing you in the test position.
2. Loosen the kicker and separator screws (1) and move the kicker (3) and the separator (4) as far to the right as they will go. Lightly tighten the screws.
3. Insert several test coins (both old and new) and note that some are returned by striking the separator.
4. Loosen the separator screw and move the separator a slight amount to the left. Lightly retighten the screw.
5. Insert the test coins again and, if some are still returned, repeat Step 4 until all the coins are accepted.
6. Loosen the kicker screw and move the kicker as far to the left as it will go. Lightly retighten the screw.
7. Insert the test coins and note that some are returned.
8. Loosen the kicker screw and move the kicker a slight amount to the right. Lightly retighten the screw.
9. Insert the test coins again and, if some are still returned, repeat Step 8 until all the coins are accepted.
10. Be sure that both screws are tight after the adjustments have been made.

Magnet gate

1. Set the acceptor with the front of the unit facing you in the test position.
2. Turn the magnet gate adjusting screw (16) out or counterclockwise until none of the coins will fit through.
3. With a coin resting in the acceptor entrance, turn the adjuster in or clockwise until the coin barely passes through the magnet gate.
4. Test this adjustment using several other coins (both old and new) and, if any fail to pass through the magnet gate, repeat Step 3 until all the coins are accepted.
5. Fix the magnet gate adjusting screw in this position with a drop of glue.

Additional Cleaning

1) Remove the transfer cradle (12) and the undersize lever (14).
2) Use a pipe cleaner or similar effective cleaning tool to clean the bushings and pivot pins.
3) Replace the transfer cradle and the undersize lever.
4) To be certain the coin mechanism is completely free of any residue, place the mechanism in boiling water for several minutes. Carefully remove it and let it air-dry completely before reinstalling in the door.

Figure 3-9 Adjustments on Coin Mechanism

ments, remove the coin mechanism from the coin door. Then take it to a clean, well lighted area where it can be placed in a vertical position on a level surface (such as a bench top). Besides a screwdriver, you will need several coins, including both new and old, worn ones. Figure 3-9 shows an exploded view of the mechanism and gives procedures for adjusting the kicker, separator, and the magnet gate. These adjustments should only be done by someone with experience in servicing coin mechanisms and who understands their operation.

General Troubleshooting Hints

The first action is to look for jammed coins. After these have been removed, examine the coin path for presence of foreign material or loose objects (such as chewing gum, small metallic objects, paper wads, etc.). In cases where game usage is heavy, it may be necessary to clean the entire coin path periodically, in order to prevent build-up of contaminants that can hinder the movement of coins through the mechanisms. Also confirm that the trip wire on each coin switch is intact, and is properly adjusted. If troubles still persist, check the concitions and positions of the lock-out wires, and the mechanical adjustments on the coin mechanisms, before suspecting the electronics. If a coin mechanism rejects genuine coins, try to readjust it. If this is not successful, then replace it with a working mechanism.

C. FUSE REPLACEMENT

Canyon Bomber contains seven fuses, five on the power supply assembly in the lower cabinet and two on the TV monitor assembly in the upper (TV) cabinet. All fuses are easily accessible through the rear access door. Replace fuses only with the same type of fuse as follows:

TEC TM-600/623 Monitors:
3AG 2-amp and 0.5-amp quick-blow, 250 volts
Motorola M5000/M7000 Monitors:
3AG 0.8-amp quick-blow, 250 volts
Power Supply:
Fuses F1 and F2—3AG 3-amp slow-blow, 250 volts
Fuses F3 and F4—3AG 2.5-amp slow-blow, 125 volts
Fuse F5—3AG 8-amp quick-blow, 125 volts

D. LAMP REPLACEMENT

The game contains one fluorescent lamp located in the upper cabinet and one LED switch in each START button.

Fluorescent Lamp Replacement Procedure (Refer to Figure 3-10)

Remove three screws (button-head socket cap #10-32) at the top edge of the cabinet and remove the graphic panel retaining plate. Remove the two front graphics panels. Lamp is now accessible.

Fire Button Replacement Procedure (Refer to Figure 3-10)

The fire button switches are accessible through the coin door. To change a fire button, unplug Molex connector, reach in through the coin door, and squeeze both sides of the switch and pull out.

E. TV MONITOR REMOVAL (Refer to Figure 3-10)

Remove three screws (button-head socket cap #10-32) at the top edge of the cabinet and remove the graphic panel retaining plate. Remove the bezel and the two front graphics panels. At the rear of the cabinet, remove the TV monitor service panel which is secured by four screws. Remove the two bolts securing the monitor base to the cabinet. Disconnect the TV monitor harness and slide the monitor out through the front of the cabinet.

F. TV MONITOR ADJUSTMENTS

CAUTION

For best results be sure the game has been turned on for a while before making any TV monitor adjustments.

NOTE

The TV monitor adjustments are accessible through the rear door panel of the game cabinet. These adjustments have to be done while the game is energized. Therefore, only persons familiar with safety measures and repair procedures on electrical equipment should perform them.

The TV monitor should be adjusted only when the picture is distorted or if the contrast or brightness seem out of adjustment.

The monitor's adjustments function like those of a conventional, home television set, except that the volume adjustment has no effect. Instead, the game

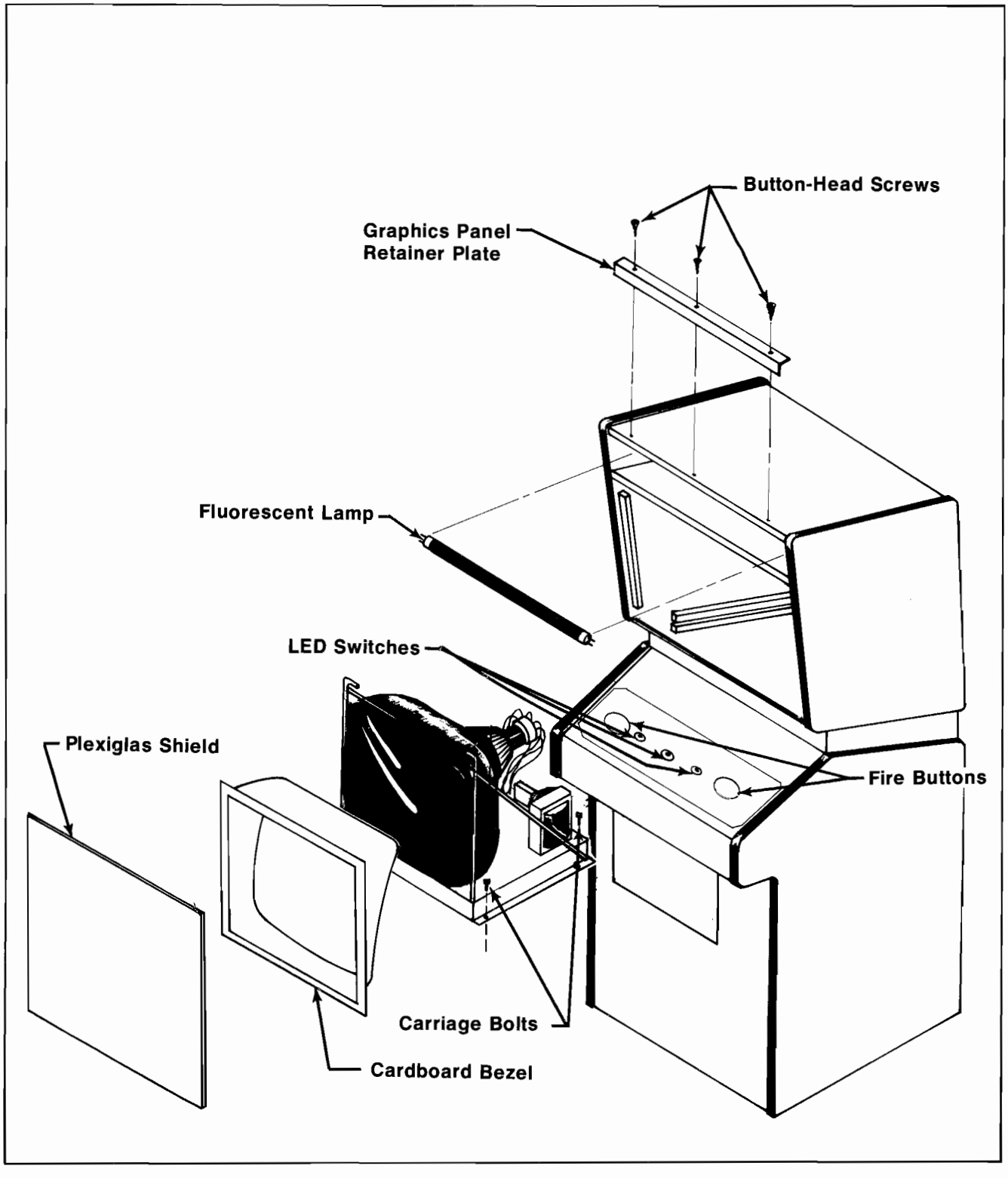

Figure 3-10 Lamp and TV Monitor Removal

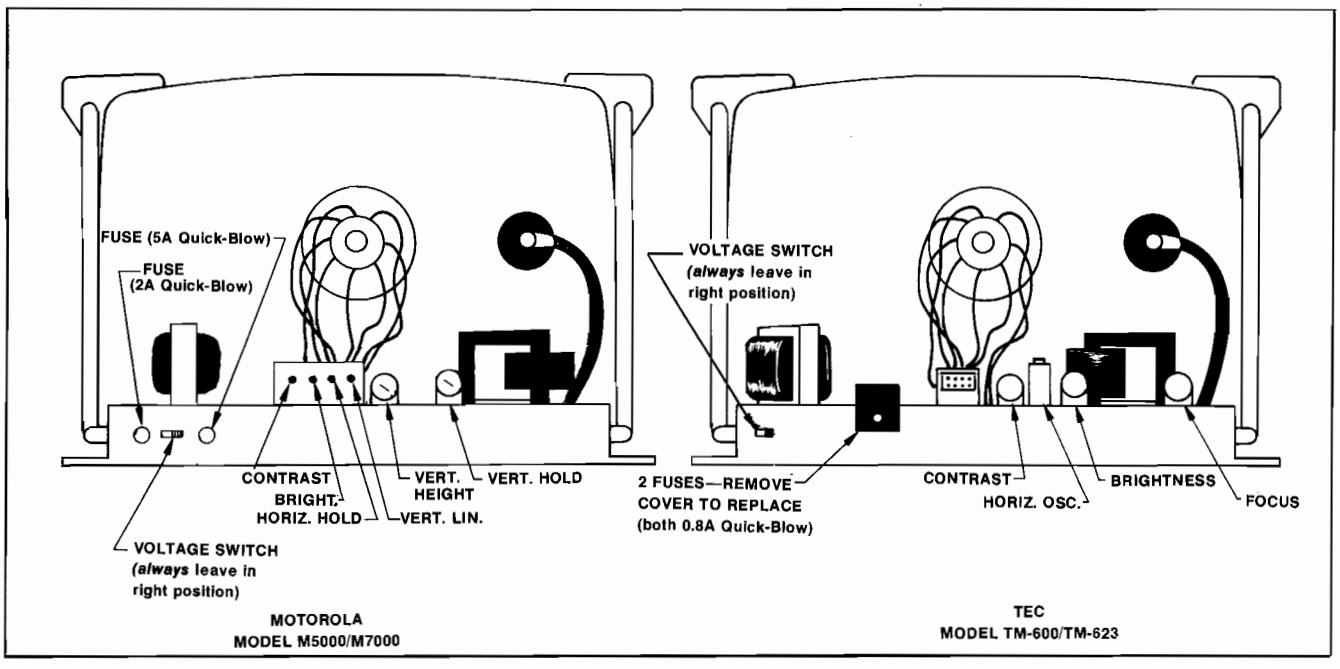

Figure 3-11 Locations of Adjustments on TV Chassis

produces its sound in circuits separate from the TV monitor. Figure 3-11 shows the location of the adjustments on both TV monitors used by Atari. Your game contains a TV monitor manufactured to Atari specifications by either Motorola or TEC.

When making adjustments, follow these general guidelines:

BRITE (Brightness)—Perform this adjustment before the contrast. Adjust so that the white lines covering the screen just barely disappear, when the brightness is turned up.

CONT (Contrast)—Adjust so that the images are as bright as possible against the dark background without being blurred.

HORIZ HOLD (Horizontal Hold) or HORIZ OSC (Horizontal Oscillator)—Adjust if the picture is slightly off-center horizontally, if the images appear warped, or if the picture is broken up into a series of diagonal lines. Adjust for a stable, centered picture.

VERT HOLD (Vertical Hold)—This needs adjustment only if the picture appears to be rolling up or down the screen. Adjust for a stable, centered picture.

G. LED START SWITCH REPLACEMENT

Unlock and open the coin door. Disconnect the control panel cable connector and remove the four wing nuts (two bottom and two top) securing the control panel. Note that a ground wire is secured under one of the lower wing nuts. The LED switches are accessible when the panel has been removed. Remove wires from the suspected switch and turn the switch counterclockwise while holding the cone-shaped nut on the outside of the game cabinet. Install a new switch using the reverse procedures. Reconnect the harness wires and when reinstalling the panel, be sure to secure the ground wire as before.

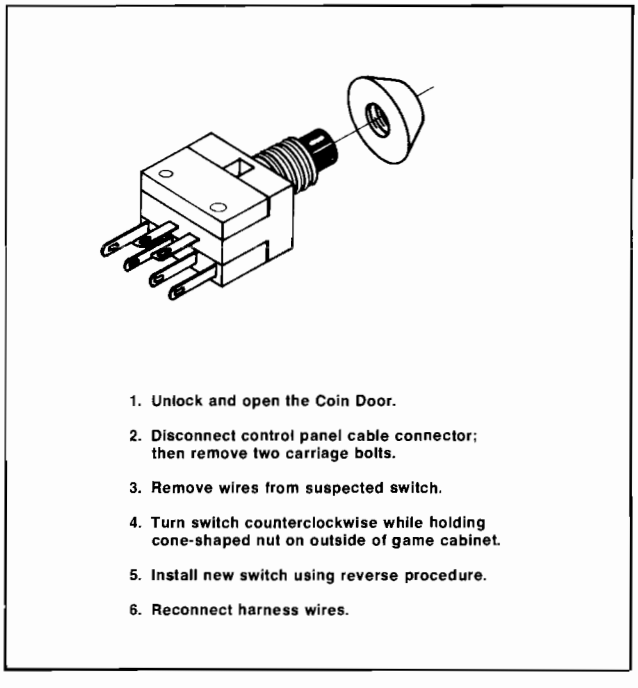

Figure 3-12 LED Start Switch Replacement

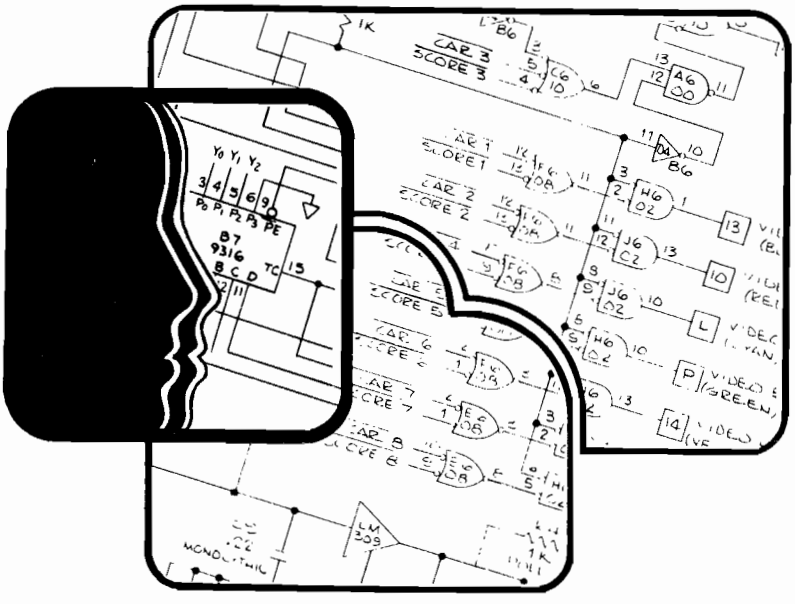

A. GENERAL INFORMATION

This chapter provides a technical description of the Canyon Bomber electronic circuitry. Electronically, the game consists of a power supply, a TV monitor, a game printed circuit board (PCB), and a speaker. Electrically, it consists of a control panel, a fluorescent light, and a coin door.

For easy reference the Canyon Bomber PCB is divided into 126 sections. These sections are identified by letters A through R (skipping letters G, I, O and Q because they may be easily confused with numbers 6, 1, and 0 respectively) for the short side of the PCB and numbers 1 through 9 for the long side of the PCB. For example, sheet 1 of Figure 4-8 illustrates an inverter E4 at the upper left-hand corner of the drawing. The component hardware of inverter E4 will be found at coordinates E and 4 on the PCB.

THEORY OF OPERATION

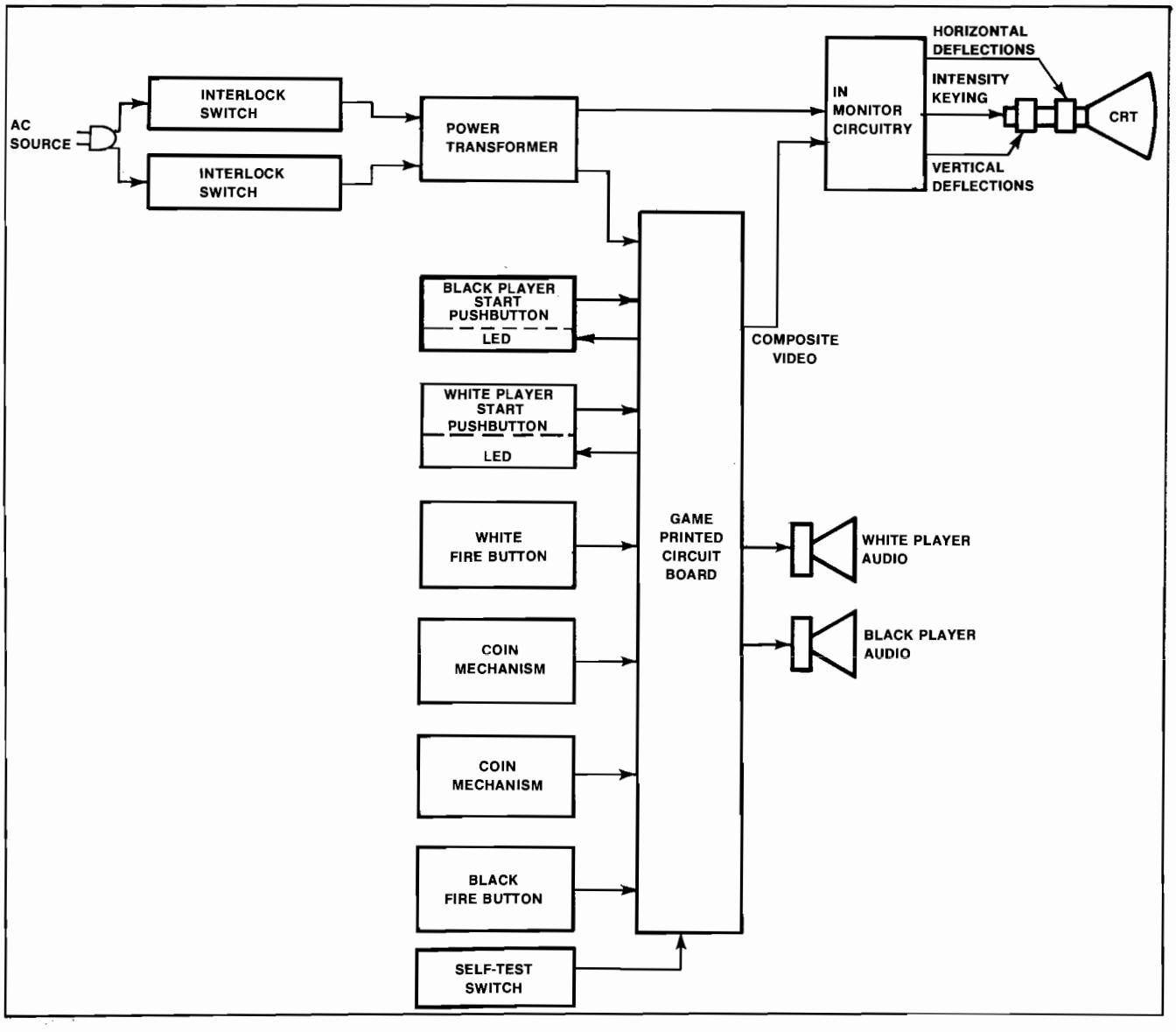

Figure 4-1 Game Block Diagram

On the Canyon Bomber PCB schematic diagram (Figure 4-8) the symbol P appears at various inputs of the integrated circuits and indicates a connection to +5 VDC through one of the pull-up resistors R1, R2, R4, R26, R40, and R90.

The following circuitry discussion is separated into two sections—the microcomputer circuitry and game circuitry. Figure 4-2 is a block diagram of the entire Canyon Bomber PCB.

B. COMPONENTS OF THE MICROCOMPUTER SYSTEM (Refer to Figure 4-2)

The microcomputer system carries out complex tasks of the game by performing a large number of simple tasks. Control of the system is the primary function of the microprocessing unit. The microprocessing unit causes the system to perform the desired operations by addressing the program memory for an

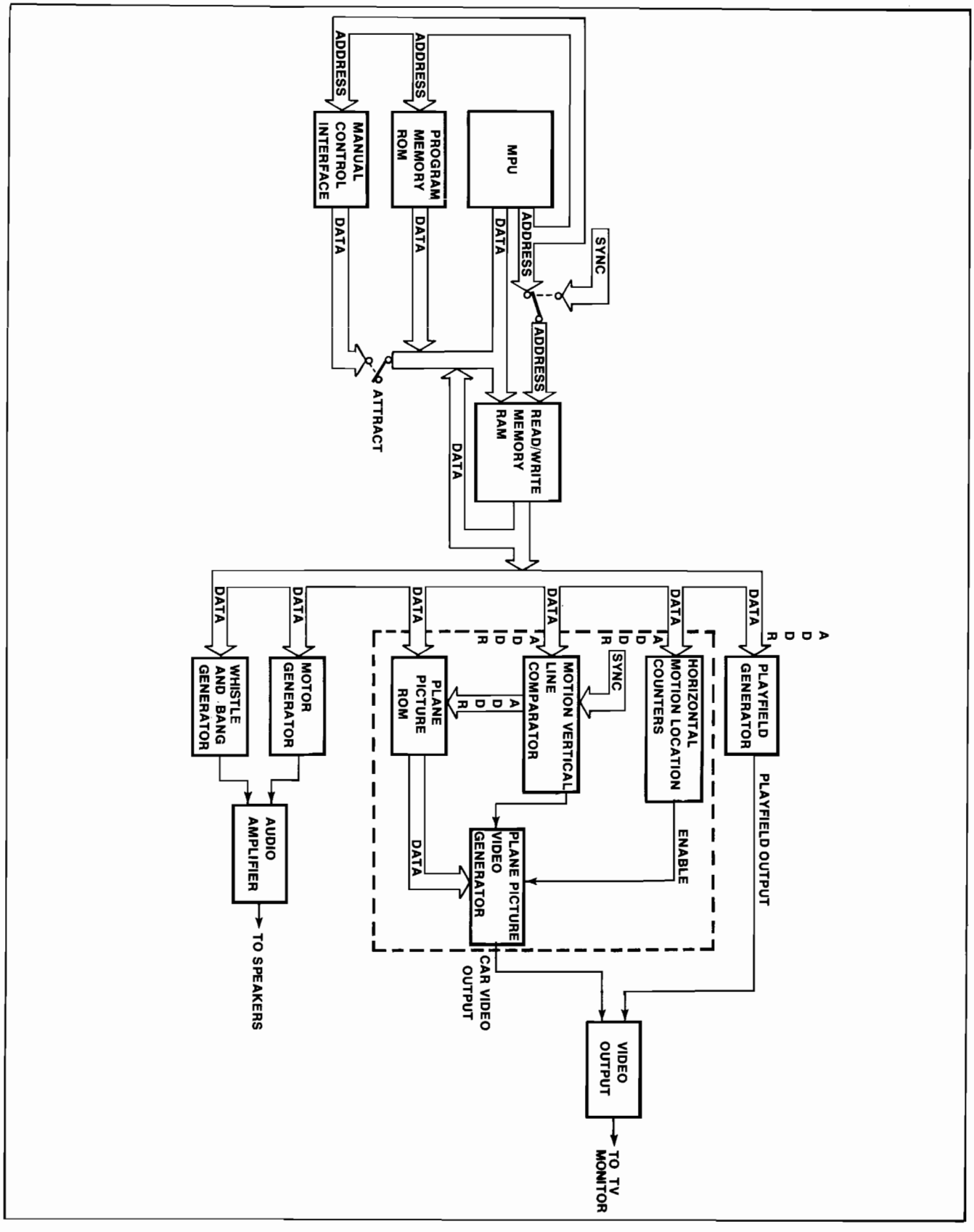

Figure 4-2 Canyon Bomber PCB Block Diagram

instruction, reading that instruction, and then executing the simple task dictated by that instruction. Temporary storage of data necessary for the execution of future instructions, such as arithmetic operations, is stored in a read/write memory.

Program Memory
(Bottom Half of Schematic Sheet 3)

Program memory consists of read-only memories (ROMs), permanently programmed to execute the Canyon Bomber game. Program memory is either one ROM at D1, or 4 ROMs at H1, K1, N1, and R1. If the game is equipped for foreign languages, they will be stored in either one ROM at C1, or two ROMs at J1 and P1.

Since the data in the program memory is a permanent physical configuration of the ROM chips, the data is not lost when power is disconnected from the game or when the chip is removed from its socket. Since the program consists of read-only memory, the result of an address input can only be the "reading" of data stored in the manufacturing process. It is not possible to "write" in more data.

Read/Write Memory
(Top Half of Schematic Sheet 3)

Read/write memory consists of random-access memory (RAM), which actually contains eight random-access memories (2102-1s). Data may be stored in the RAM (called "writing" the RAM), then later recalled (called "reading" the RAM). Memory size of the read/write memory is 1k x 8.

In order to read from the RAM, R/$\overline{W}$ (pins 3) input of all random-access memories must be a high logic level; to write into the RAM, R/$\overline{W}$ must be low.

As previously mentioned, data stored in the RAM is for the purpose of performing operations on data as instructed by the program memory. Since the RAM is a temporary storage area, removing power from the RAM chips will "erase" all stored data.

Microprocessing Unit

As mentioned earlier, the controller of the microcomputer is the microprocessing unit (MPU). From the MPU, a sixteen-bit address bus addresses program memory, RAM, and an address decoder. An eight-bit bi-directional data bus serves as a path for transferring data from program memory, and for transferring data to and from the RAM and other interfacing devices.

Tri-State Devices

Tri-state devices, such as H3 of schematic sheet 3, are capable of having normal logic output of ones and zeros when disable (pin 1) is low. When disable is high, the output becomes a high impedance. In other words, when disable is high, it is equivalent to completely removing device H3 from the circuit. ROMs and RAMs are also tri-state devices. Each ROM or RAM must be enabled by a certain logic level at its chip-enable input before the device is capable of outputting or inputting data.

C. MICROCOMPUTER SYSTEM

The primary function of the Canyon Bomber microcomputer is to instruct the game circuitry for the proper TV monitor display and audio outputs for corresponding manual inputs.

Program Memory Enable

With initial power applied to the Canyon Bomber PCB, the MPU addresses program memory for an instruction by placing a 16-bit code at outputs AB0 through AB15. The address decoder, consisting of decoders F6, E6 and addressable latch C7, receives the most significant bits of this address code as an instruction of which part of program memory to access. Outputs of one-of-ten decoder F6 enable only the individual ROMs of program memory required for the desired instruction.

RAM Enable

Now, with the address decoder addressed to enable the desired program memory ROMs, and program memory addressed for a data insruction, the MPU receives an 8-bit data instruction from program memory on the data bus. If this data instruction includes the storage of information, the MPU addresses the RAM and writes the data into the memory RAMs. The procedure of writing into RAM is enabled by two signals; chip enable CE (pins 13) and R/$\overline{W}$ (read/write, at pins 3) of the RAM must be low.

The address decoder F6 receives an address (A11 though A13) from the MPU. The result of these signals is a low $\overline{DISPLAY}$ signal at the input of multiplexer F2 for a low chip enable CE at pins 13 of the RAM. The MPU also causes the R/$\overline{W}$ input (pins 3) to the RAM to be pulsed, via the $\overline{WRITE}$ signal. When this input is pulled to low, MPU data on the data input to the RAM (pins 11) is stored into the RAM location determined by address inputs A0 through A9.

Phase 1 and Phase 2

Phase 1 (Φ1) and phase 2 (Φ2) are outputs of the MPU and are formed by shaping the pulse of horizon-

tal synchronization pulse 4H by D-type flip-flop C6. The 4H input of C6 (pin 13) is fed twice through the flip-flop at a clock rate of 12.096 MHz. The output of the first flip-flop and the output of the second flip-flop is fed through an OR gate to produce a phase 0 (Φ0) signal, as illustrated in Figure 4-2. The MPU provides an output of Φ2 that is exactly like Φ0, except with a slight delay, and an output Φ1 that is of an opposite phase of Φ2.

When Φ1 is positive, the address and data lines of the MPU change and stabilize for the next output. When Φ2 is positive, the MPU addresses memory on the address bus and inputs or outputs data on the data bus. In order to guarantee that the MPU data is written to external devices at the proper time, write enable (WRITE, C6 pin 15) is shaped by NAND gate B6 and D-type flip-flop C6 as ilustrated in Figure 4-3.

Phase 2 is also used to control the output of RAM address multiplexer D2, E2 and F2. The multiplexer acts as a 12-pole double-throw switch, switched at a rate of Φ2. Again, as previously mentioned, the RAM is addressed by the MPU, and data is written into it when Φ2 is high. When Φ2 is low, the RAM is addressed by horizontal and vertical synchronization and data is read out of the RAM (see Figure 4-4).

RAM Output

The RAM has a second data output latch that places the RAM data at the output of D-type flip-flop K3 and J3 with the next rising edge of Φ2 (clock input of K3 and J3).

D. MICROCOMPUTER WATCHDOG

Watchdog is an external monitoring system that resets the program execution back to its initial instructions, if the program execution memory deviates from its intended sequence. This is accomplished by a watchdog statement (address code), incorporated in program memory, that results in a $\overline{\text{TIMER}}$ $\overline{\text{RESET}}$ pulse at the output of the address decoder. This reset pulse must occur before ring counter C4 reaches the count of five. Therefore if the program memory is functioning properly, a $\overline{\text{TIMER}}$ $\overline{\text{RESET}}$ pulse occurs within every five frames of video.

E. COMPONENTS OF CANYON BOMBER GAME CIRCUITRY

The game circuitry receives game instructions from the microcomputer and responds with the proper video and audio outputs. Manual controls of the game circuitry provide control information as a data input to the microcomputer.

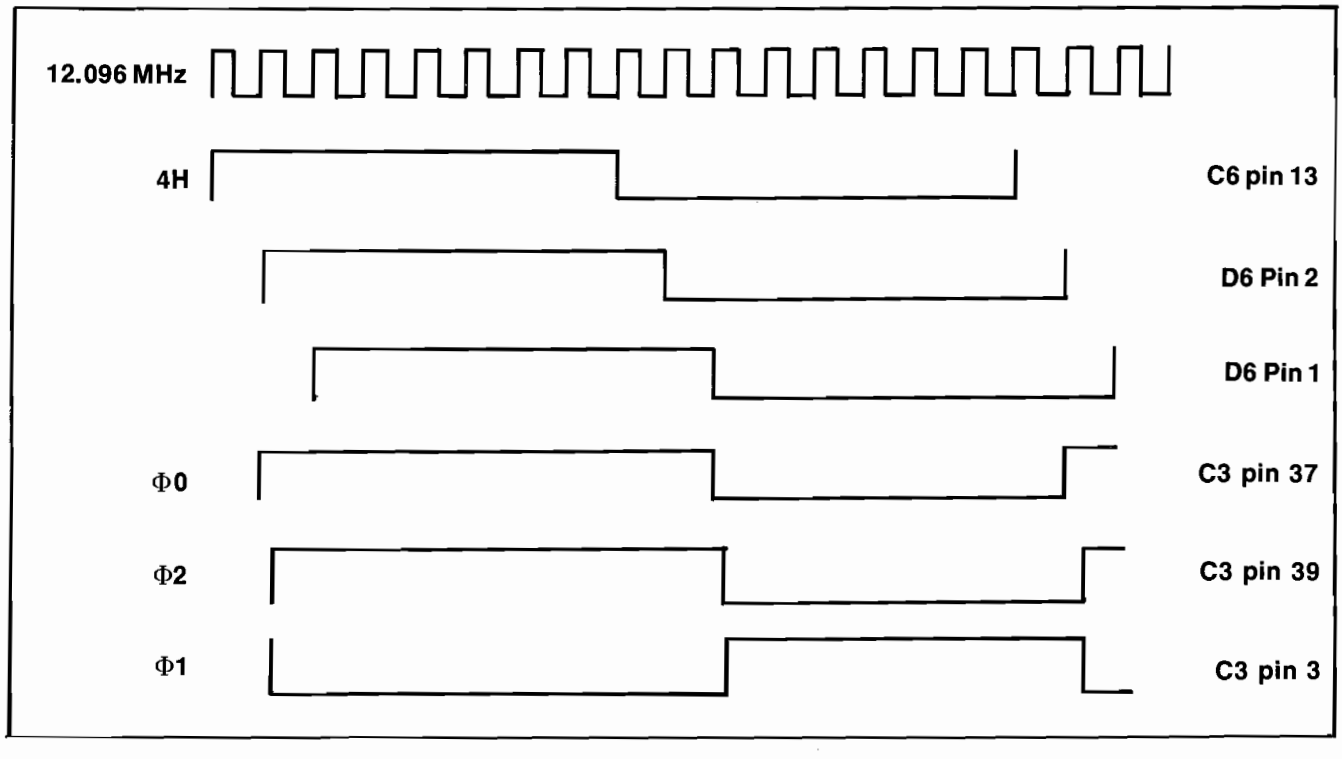

Figure 4-3 Phase 1 and Phase 2 Signal Shaping

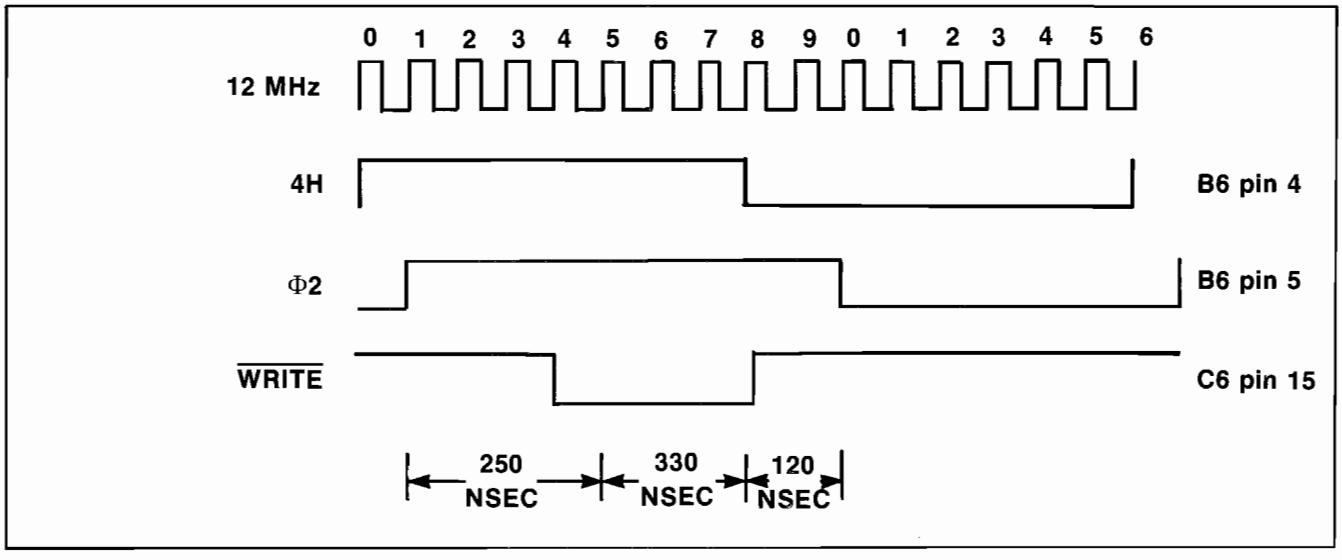

Figure 4-4 RAM Write Enable Signal Shaping

System Clock and Sync Generator (Top of Schematic Sheet 1)

The crystal-controlled clock generates a 12.096-MHz clock frequency that is used to produce all of the operating frequencies of the game. Note that the 9-bit binary counter (F4, D5, E5) counts from 128 to 512. This is accomplished by tying bit 128H (pin 5 of E5) to a pull-up resistor. Also note that the output of D-type flip-flop L6 is controlled by sync PROM J6 (programmable read-only memory programmed for the desired output).

The horizontal and vertical synchronization signals are used to produce a TV monitor raster made up of 262 horizontal lines at horizontal frequency of 15,750 Hz (256H). Synchronized with line 240 is a vertical blanking pulse that occurs for the duration of 22 more horizontal scans, resulting in the total number of 262 lines per frame.

Playfield Generator (Left Bottom of Schematic Sheet 1)

The playfield generator generates both the playfield and all alphanumeric video for the TV monitor display. This is accomplished by the playfield ROM N8 and shift register N9.

The TV monitor display is made up of 32 horizontal by 30 vertical grid sections. For each grid section, there is a byte of data (one byte equals eight bits D0 through D7) in the microcomputer RAM. During the Φ2 cycle, the RAM is addressed by the MPU, at which time the desired byte of data is transferred from program memory to the data input of the RAM. Then, during the Φ1 cycle, the horizontal and vertical syn-

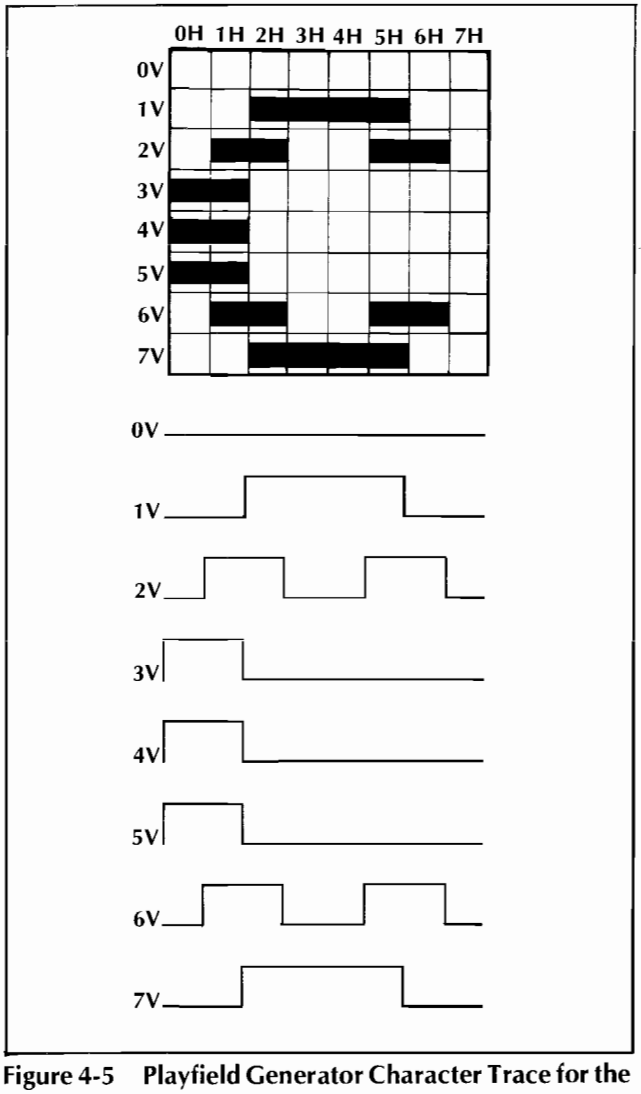

Figure 4-5 Playfield Generator Character Trace for the Letter "C"

chronization signals can access each of these bytes of data as that particular grid is to be displayed. The RAM then outputs six bits of data (DISPLAY 0 through DISPLAY 5) that address any of the 64 different alphanumerics and playfield characters stored in the playfield ROM.

The playfield ROM is programmed to provide four bits of data for each of 1024 addresses. The least significant addresses are from horizontal and vertical synchronization 4H, 1V, 2V, and 4V; the six most significant addresses are DISPLAY 0 through DISPLAY 5 from the microcomputer RAM. For each of the 1024 addresses, there is one of 64 grid pictures, each being eight scan lines high.

The top of Figure 4-5 illustrates the letter *C* as it would be "traced" on the TV monitor display. The RAM would provide one six-bit address to the playfield ROM for the letter, while vertical synchronization 1V, 2V and 4V would complement the RAM address for each of the horizontal scan lines. The bottom of Figure 4-5 illustrates the output of shift register R3 for each horizontal scan.

Note the letter "C" in the word *SCORE* in Figure 4-6. In order to generate the character in this location, the microcomputer RAM would output a data code at the time this part of the display is being scanned. This six-bit code (DISPLAY 0 through DISPLAY 5) would contain the playfield ROM address for the letter "C". Vertical synchronization 1V, 2V, and 4V would determine which of the eight lines of the character was being scanned at that time. Sync signal 4H would determine which half, left or right is being scanned.

Shift register N9 then loads the actual playfield or alphanumeric data from the playfield ROM and shifts it out in serial video (N9 pin 12).

Binary counter L7 latches data signal DISPLAY 7 from the microcomputer RAM. This results in the selection of white playfield video if DISPLAY 7 is high or black playfield video if DISPLAY 7 is low.

Binary counter L7 is also used to produce the COMP SYNC, COMP BLANK, and a 256H signal that are all delayed one character's width from their original timing. This delay is used to center the playfield on the monitor's horizontal scan.

Motion Generator

The motion generator generates the video for the four moving objects of the Canyon Bomber game. The airplane picture ROM (consisting of ROMs M5 and N5 for a memory size of 1024 x 8) is programmed to provide 32 bits of data for each of the 16 lines of each of the four plane pictures of a car. The bombs are produced not from ROM, but from the setting of flip-flops R9.

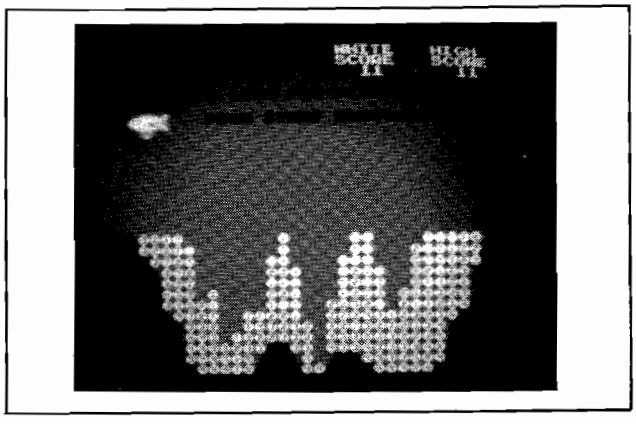

Figure 4-6 TV Monitor Display

The microcomputer RAM provides data for displaying each plane or bomb picture. One byte determines the vertical location of the object, and another determines its horizontal location. Another byte determines the choice for the plane picture.

Vertical position data is received by vertical line comparator H5 and K5. Take for example, the data code for a plane to be displayed beginning on line 120. The RAM byte data code of 01111000 would be loaded into the comparator. When the vertical line comparator reaches the count of 01111000, and when 8H and $\overline{256H}$ are all high, the conditions are met for a low logic level at the output of NAND gate K4 (pin 8). One $\Phi 2$ clock pulse later, a low appears at the pin 5 output of latch J3 (clock input for J3 is located on schematic sheet 3). This initiates one of the eight vertical load pulses.

The RAM byte data code that controls plane selection is capable of addressing any of four different plane pictures. The two bits of data code necessary to do this (DISPLAY 3 and DISPLAY 4) are applied directly to the address input of the plane picture ROM N5 and M5. The least significant address lines applied to the plane picture ROM (inputs A0, A1, A2, and A3) determine which of the 16 lines of the plane is being described by the ROM data output, and which quarter of the plane will be displayed. Another signal, DISPLAY 7, reflects the picture horizontally. When 1H and 2H are both low, the video data output (VID 0 through VID 7) from the plane picture ROM is timed with load vertical pulse $\overline{LDV1A}$.

Load vertical pulse $\overline{\text{LDV1A}}$ enables shift register R7 to load the video data from the plane picture ROM. This data is for the left quarter of the plane.

As 1H and 2H count up, the video data output (VID 0 through VID 7) from the airplane picture ROM sequentially loads the remaining shift registers P7, N7, and M7.

In review, the motion generator has received a RAM data code for where the plane is to be displayed vertically and a RAM data code for the proper picture of the plane. The final instruction needed is for the horizontal placement of the plane. The RAM byte that determines this is received by the plane horizontal location counter.

The object horizontal location counter P3 and N3 is loaded each horizontal line by a horizontal pulse LDHx. The counter is preset to a given count by the RAM data code (DISPLAY 0 through DISPLAY 7) during horizontal blanking. At the end of horizontal blanking 256H goes to high, and the counter is enabled to begin counting up at a clock rate of 6 MHz.

Video Output (Schematic Sheet 1)

The video output circuit receives all video signals and gates them together through summing resistors R41, R42, R43, and R44. SHIP 1, SHELL 1 and BLACK PLAYFIELD decrease the video voltage, making black. SHIP 2, SHELL 2 and WHITE PLAYFIELD increase video voltage, making white.

Manual Control Interface (Left Side of Schematic Sheet 5)

The main component of the manual control interface is multiplexer J8. This component acts as a one-pole 8-position switch, operated by address lines ADR0, ADR1, and ADR2 from the microcomputer MPU. Multiplexer J8 interfaces with two different sources of information—coin information and switch information. All information is received by the microcomputer MPU when the MPU addresses the address decoder for a low SWITCH signal that enables tri-state device H8 for a data output on the D7 data line.

Coin information is a matter of storing in the microcomputer RAM the number of times a low pulse appears on the data lines when the appropriate address input of multiplexer J8 is being addressed. The microcomputer MPU only "looks" for coin pulses during the attract mode.

The fire buttons are connected to multiplexer K8. Note that nothing is brought in on the pins designated STEER 1A, 2A, 1B, 2B or THRUST 1 and 2.

Motor Generator (Top Right of Schematic Sheet 5)

The key to the motor generator is the operation of transistor Q1 in conjunction with timer H9. Timer H9 operates as an oscillator with output frequency dependent upon the resistive charge path of capacitor C41.

Varying the collector-to-emitter resistive value of transistor Q1 varies the combined resistive charge path of capacitor C41 through transistor Q1 and resistors R48, R52, and R49. As the combined resistive value decreases, the output frequency of the timer increases. Variable resistor R52 makes it possible for the operator to adjust the frequency for a desirable motor idle sound.

The conductance of transistor Q1 is varied by grounding any combination of voltage-divider resistors R30, R31, R32, and R33. The combinations of these resistors are determined by data (from the microcomputer RAM) applied to the input of latch F8. Table 4-1 lists the approximate voltages at the base of

Table 4-1 Approximate Base Voltage of Transistor Q1 or Q2 for Given Address

Address					
	DISPLAY 0	DISPLAY 1	DISPLAY 2	DISPLAY 3	Base Voltage of Transistor Q1 or Q2
0	L	L	L	L	5.00 VDC
1	H	L	L	L	4.25 VDC
2	L	H	L	L	4.08 VDC
3	H	H	L	L	3.95 VDC
4	L	L	H	L	3.77 VDC
5	H	L	H	L	3.65 VDC
6	L	H	H	L	3.52 VDC
7	H	H	H	L	3.42 VDC
8	L	L	L	H	3.22 VDC
9	H	L	L	H	3.13 VDC
10	L	H	L	H	3.03 VDC
11	H	H	L	H	2.95 VDC
12	L	L	H	H	2.84 VDC
13	H	L	H	H	2.77 VDC
14	L	H	H	H	2.69 VDC
15	H	H	H	H	2.62 VDC

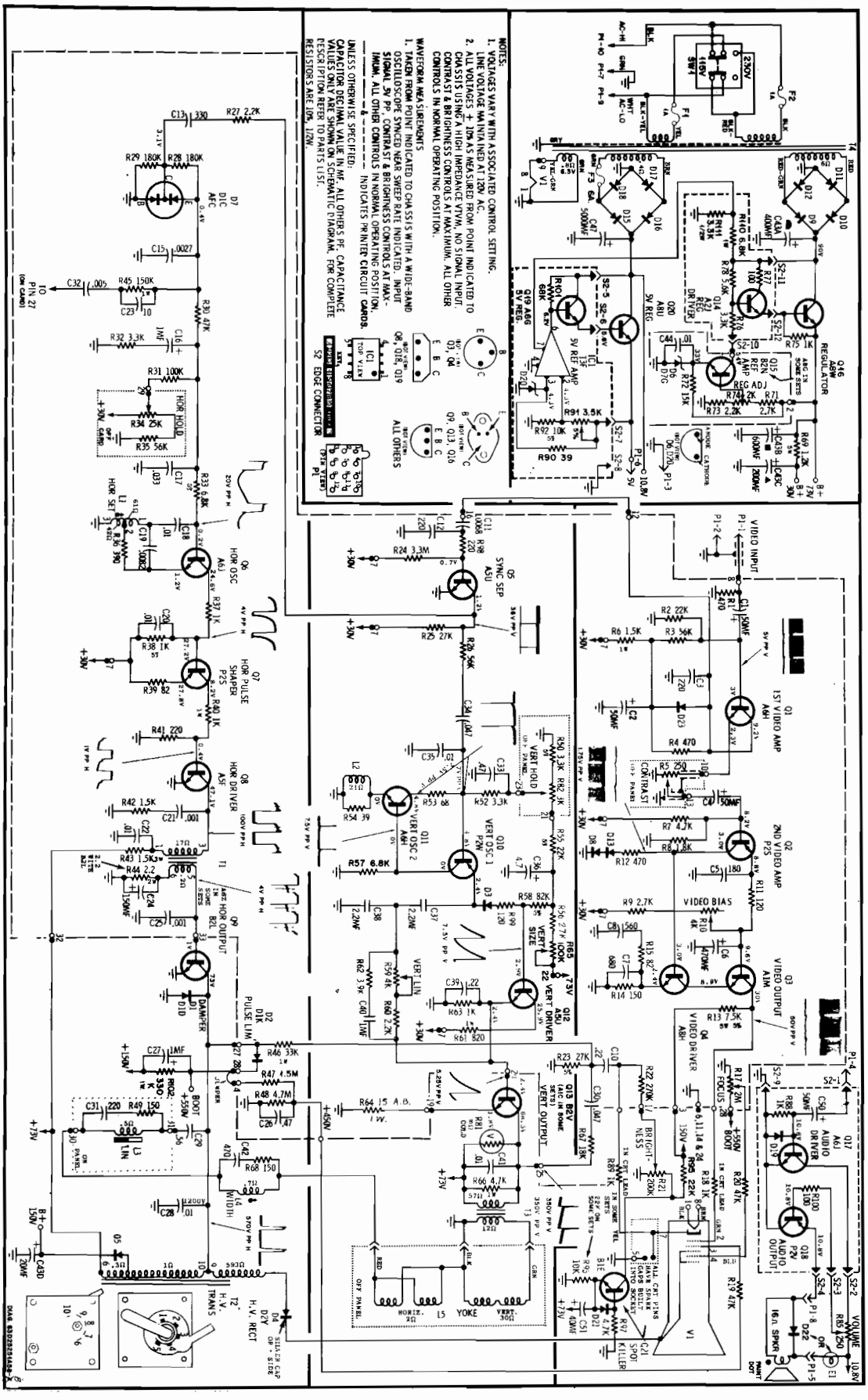

Figure 4-7 Motorola TV Monitor Schematic

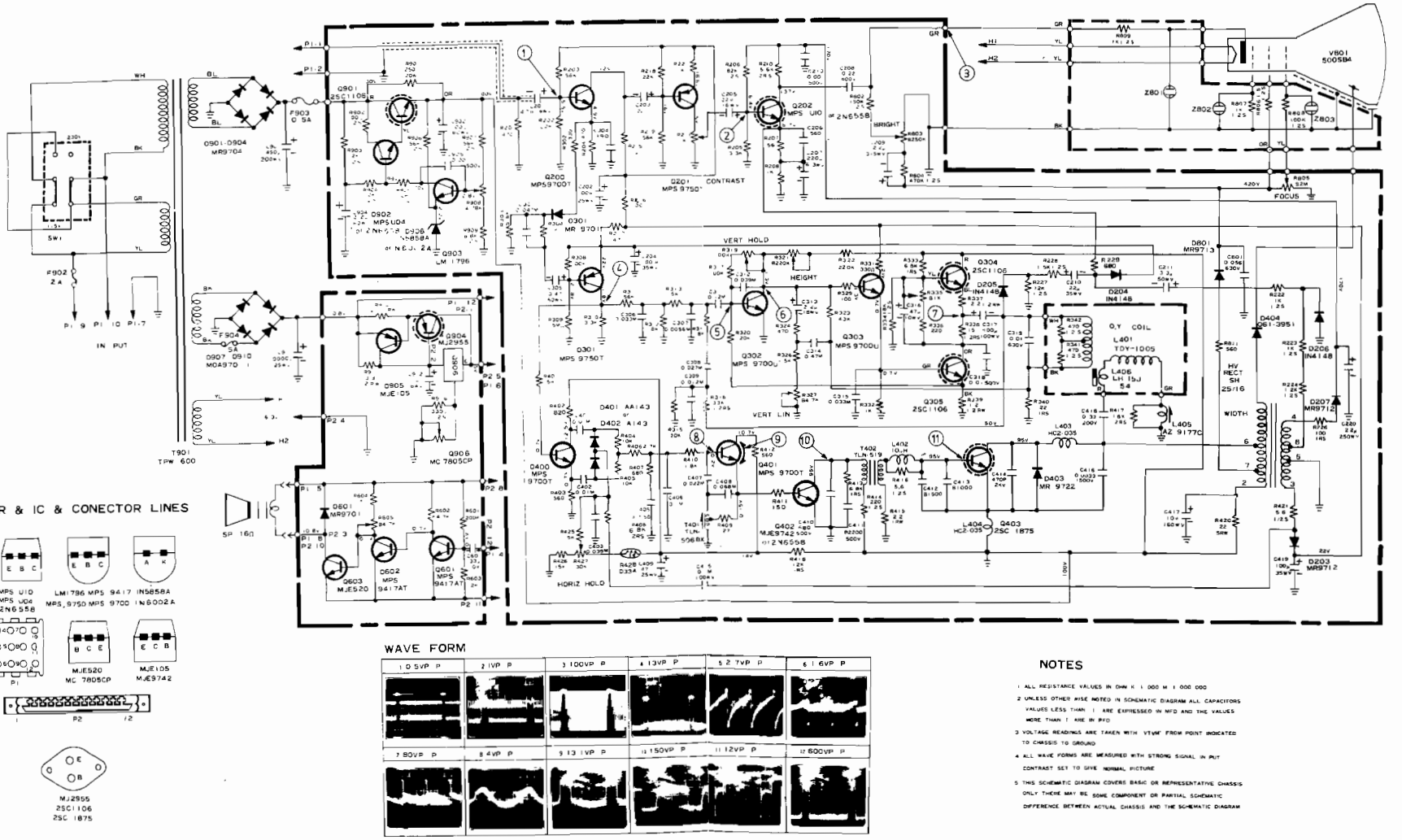

Figure 4-7 TEC TV Monitor Schematic

transistor Q1 (or Q2) for the fifteen different address inputs. These addresses cause a latch condition of latch F8 only if a low $\overline{\text{MOTOR 1}}$ signal enables latch F8.

To derive a realistic car motor sound, the output of timer H9 is divided into three separate frequencies by divider F9, then summed by resistors R53, R57, and R58. A divide-by-three signal at the QB (pin 11) output of F9 is applied to summing resistor R58. Outputs QB and QD (pin 8) are also applied to Exclusive OR gate D8 to provide a divide-by-twelve signal at the QA (pin 12) output of F9, which is applied to summing resistor R53.

Whistle Generator

A 555 (C9) is connected as an oscillator. The frequency is determined by the voltage on pin 5. When WHISTLE 1 goes high, C38 begins charging through R39 and CR3. This voltage is buffered and applied to pin 5 at C9. Therefore, as C38 charges, the oscillator frequency drops. The output is taken from the capacitor, buffered by Q5 and sent to the audio summing circuit. The frequency is adjustable with R59. When WHISTLE 1 goes low, the 555 (C9) is gated off through pin 4, and C38 is discharged through CR4 and the AND gate C8.

Audio Output

The summed signals of the motor generators, and whistle and screech generator are applied to one leg of a 5k ohm potentiometer. Varying the wiper position of the potentiometer varies the signal of audio amplifier A11 or C11, and thus controls left and right speaker volume, respectively. The output of the audio amplifiers are connected to an eight-ohm speaker for each player.

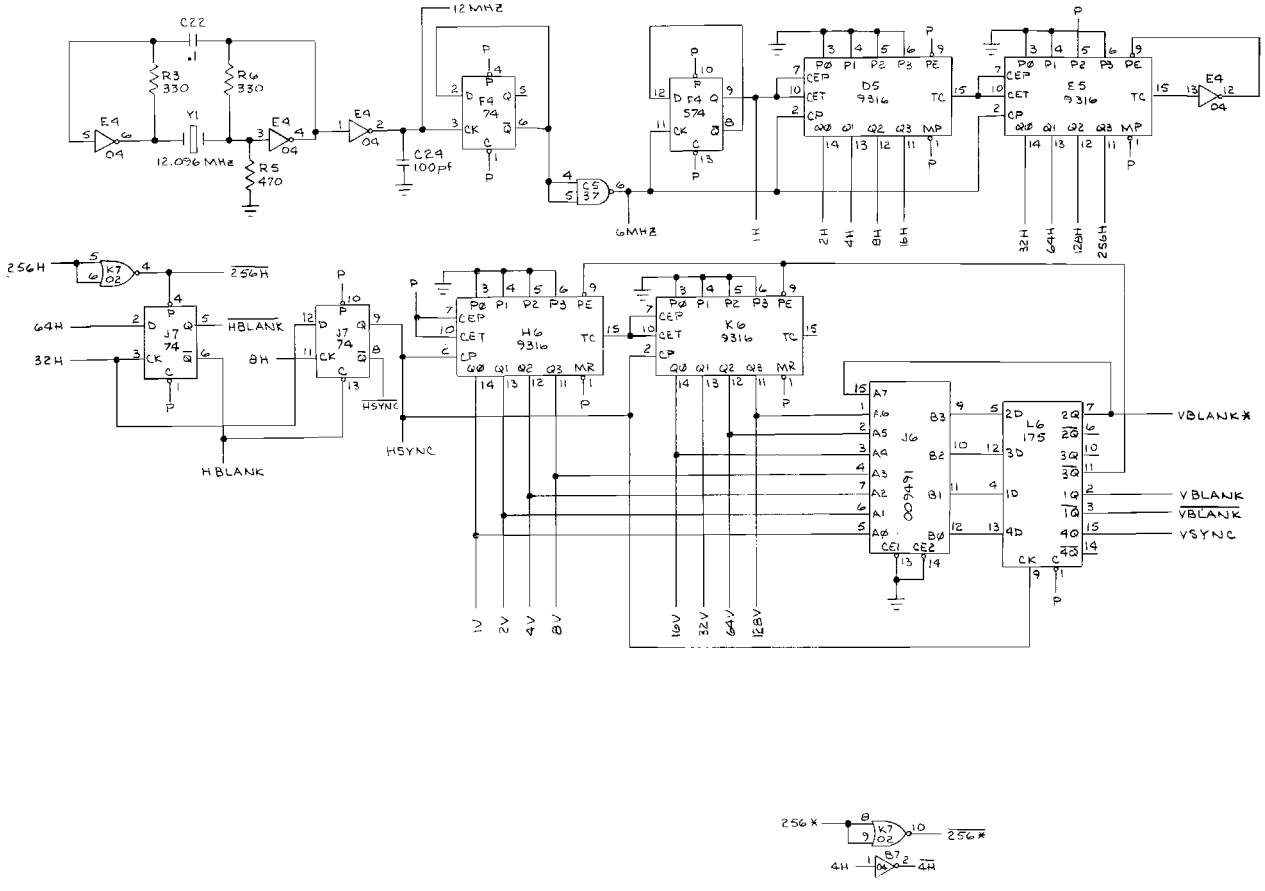

HIGHEST REF	NOT USED
R91	R85, 87
C70	
CRB	
Q6	
SW2	
Y1	

NOTICE TO ALL PERSONS RECEIVING THIS DRAWING

CONFIDENTIAL: Reproduction forbidden without the specific written permission of Atari, Inc., Sunnyvale, California. This drawing is only conditionally issued, and neither receipt nor possession thereof confers or transfers any right in, or license to use the subject matter of the drawing or any design or technical information shown thereon, nor any right to reproduce this drawing or any part thereof, except for manufacture by vendors of Atari Incorporated and for manufacture under the corporation's written license, no right to reproduce this drawing is granted or the subject matter thereof unless by written agreement with or written permission from the corporation.

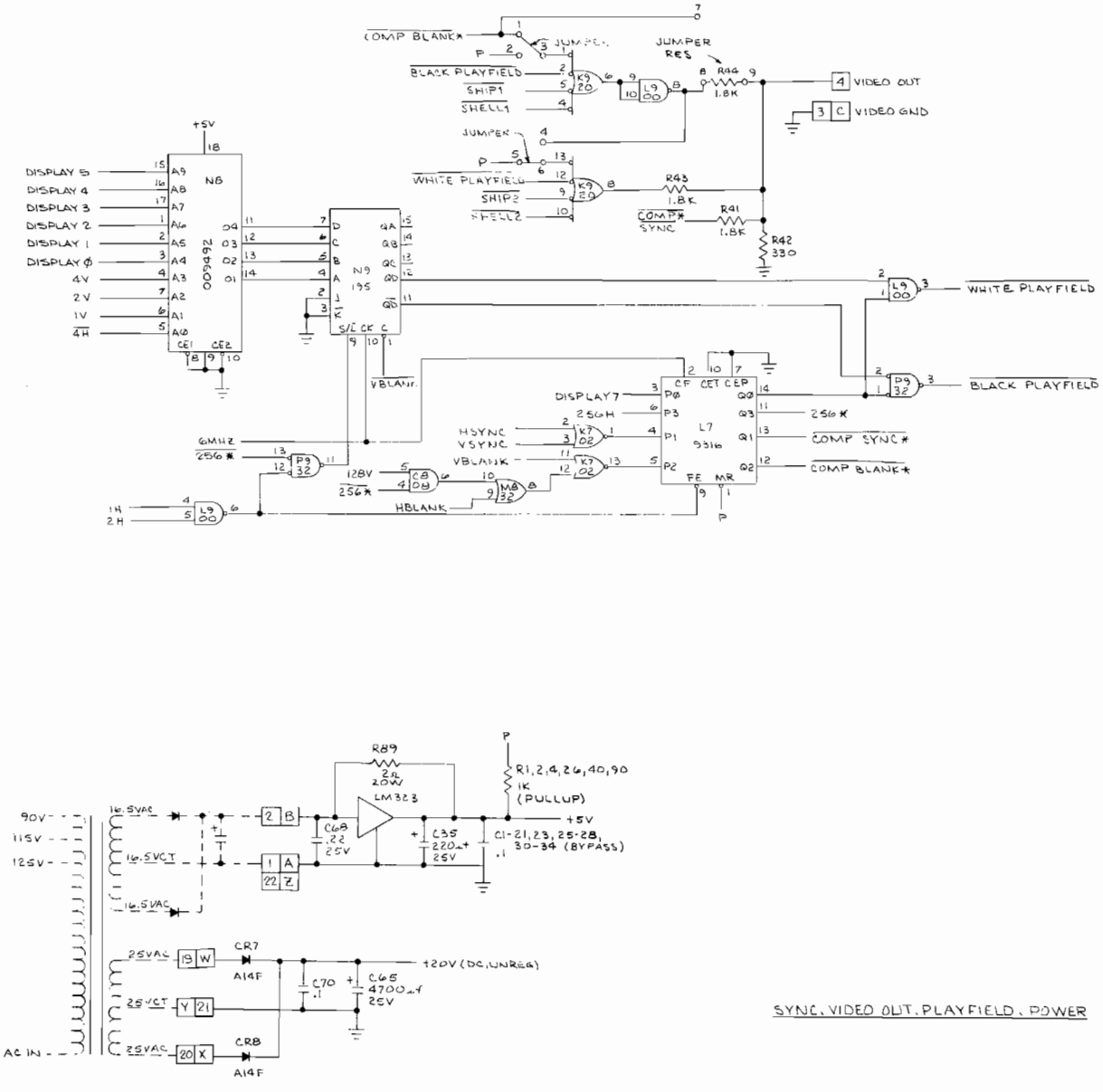

SYNC, VIDEO OUT, PLAYFIELD, POWER

Figure 4-8 Canyon Bomber Schematic Diagram
Sheet 1 of 5

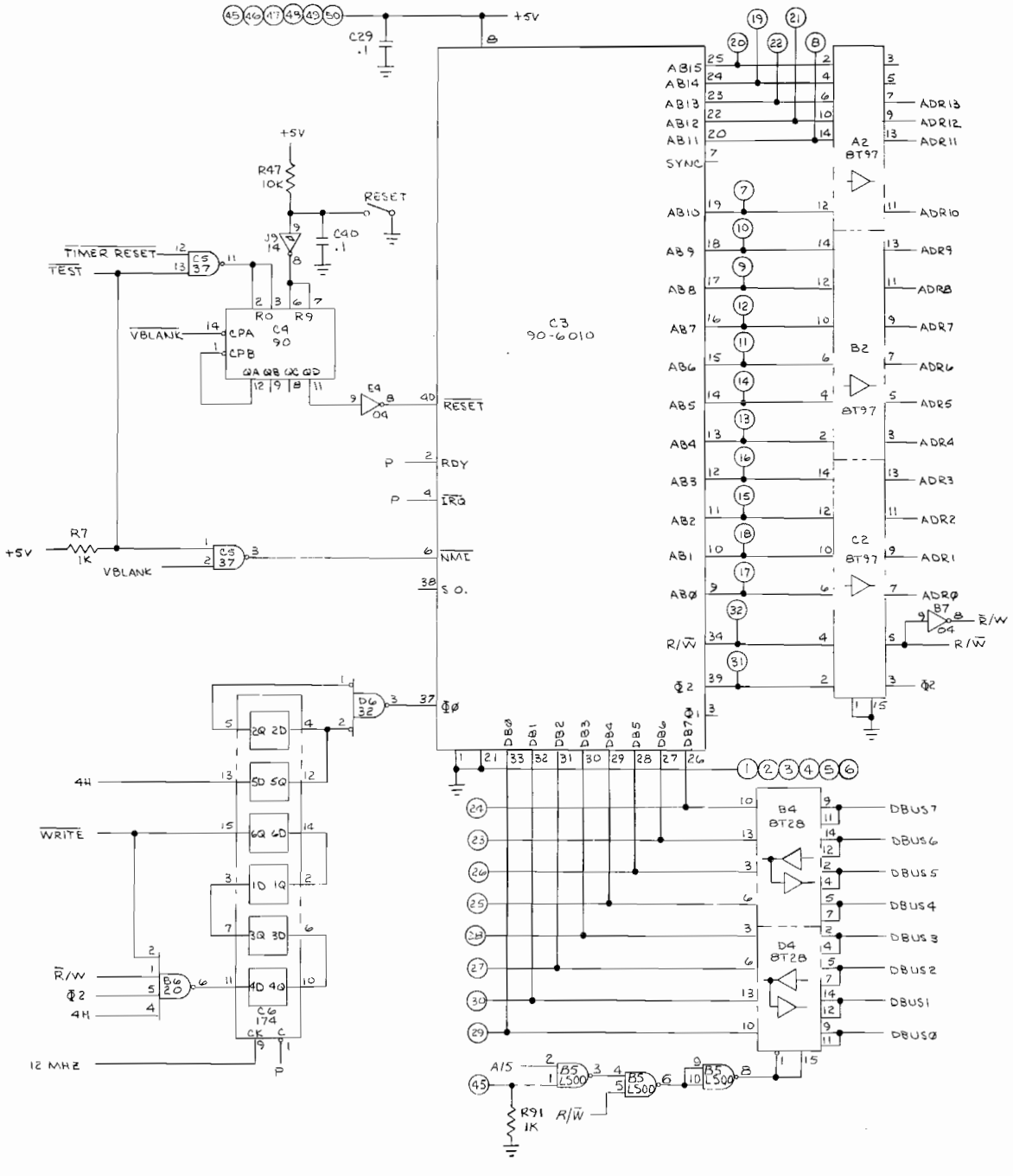
+5V
C29 .1
C3 90-6010
AB15
AB14
AB13
AB12
AB11
SYNC
AB10
AB9
AB8
AB7
AB6
AB5
AB4
AB3
AB2
AB1
AB0
R/W
Φ2
A2 BT97
B2 BT97
C2 BT97
ADR13
ADR12
ADR11
ADR10
ADR9
ADR8
ADR7
ADR6
ADR5
ADR4
ADR3
ADR2
ADR1
ADR0
B7 04
R47 10K
RESET
C40 .1
TIMER RESET
TEST
VBLANK
C9 37
C4 90
R0 R9
QA QB QC QD
E9 09
RESET
RDY
IRQ
NMI
SO.
R7 1K
VBLANK
D6 32
ΦØ
4H
WRITE
R/W
Φ2
4H
D6 20
C6 174
12 MHZ
DB0 DB1 DB2 DB3 DB4 DB5 DB6 DB7
B4 BT28
D4 BT28
DBUS7
DBUS6
DBUS5
DBUS4
DBUS3
DBUS2
DBUS1
DBUS0
A15
B5 LS00
R91 1K
R/W

NOTICE TO ALL PERSONS RECEIVING THIS DRAWING
CONFIDENTIAL: Reproduction forbidden without the specific written permission of Atari, Inc., Sunnyvale, California. This drawing is only conditionally issued, and neither receipt nor possession thereof confers or transfers any right in, or license to use, the subject matter of the drawing or any design or technical information shown thereon, nor any right to reproduce this drawing or any part thereof, except for manufacture by vendors of Atari Incorporated and for manufacture under the corporation's written license, no right to reproduce this drawing is granted or the subject matter thereof unless by written agreement with or written permission from the corporation.

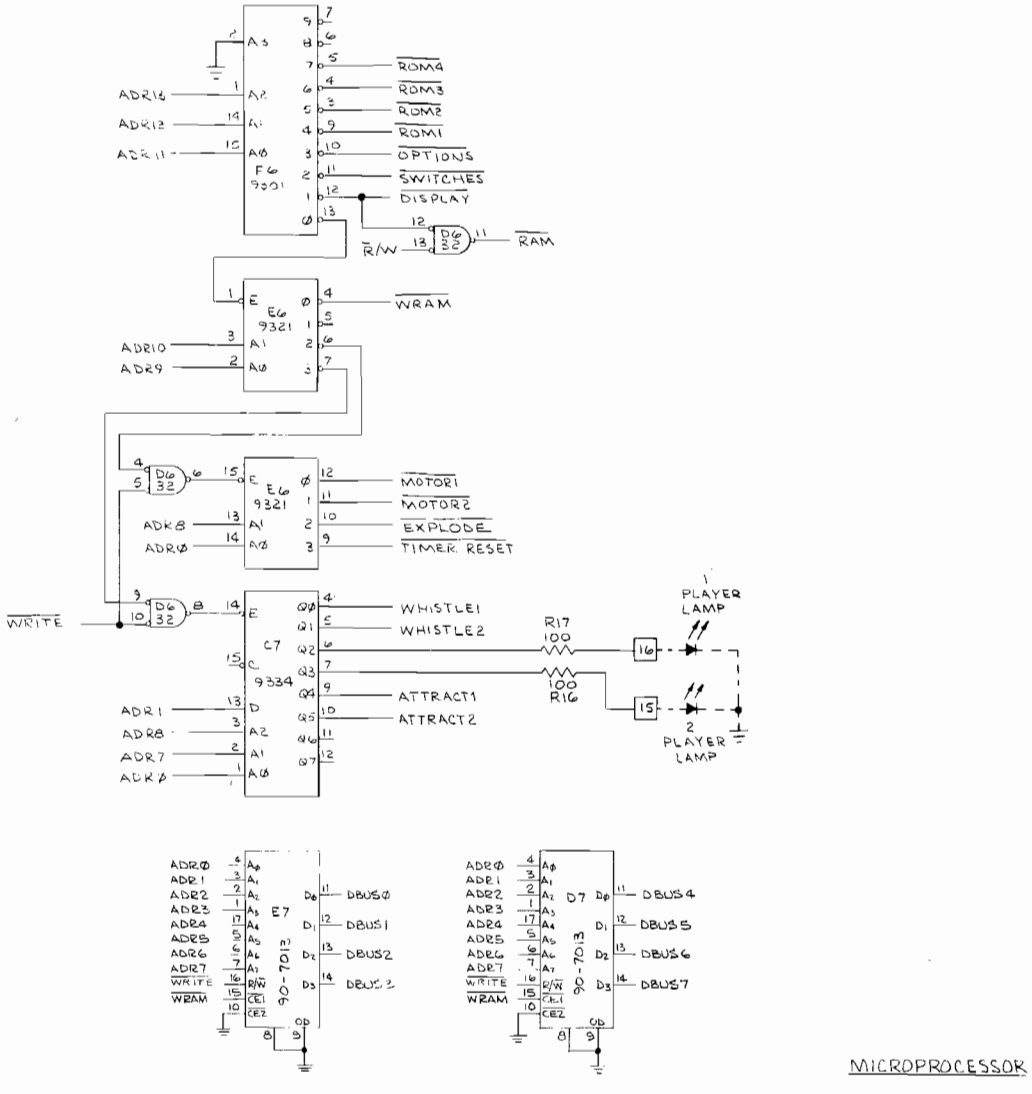

MICROPROCESSOR

Figure 4-8 Canyon Bomber Schematic Diagram
Sheet 2 of 5

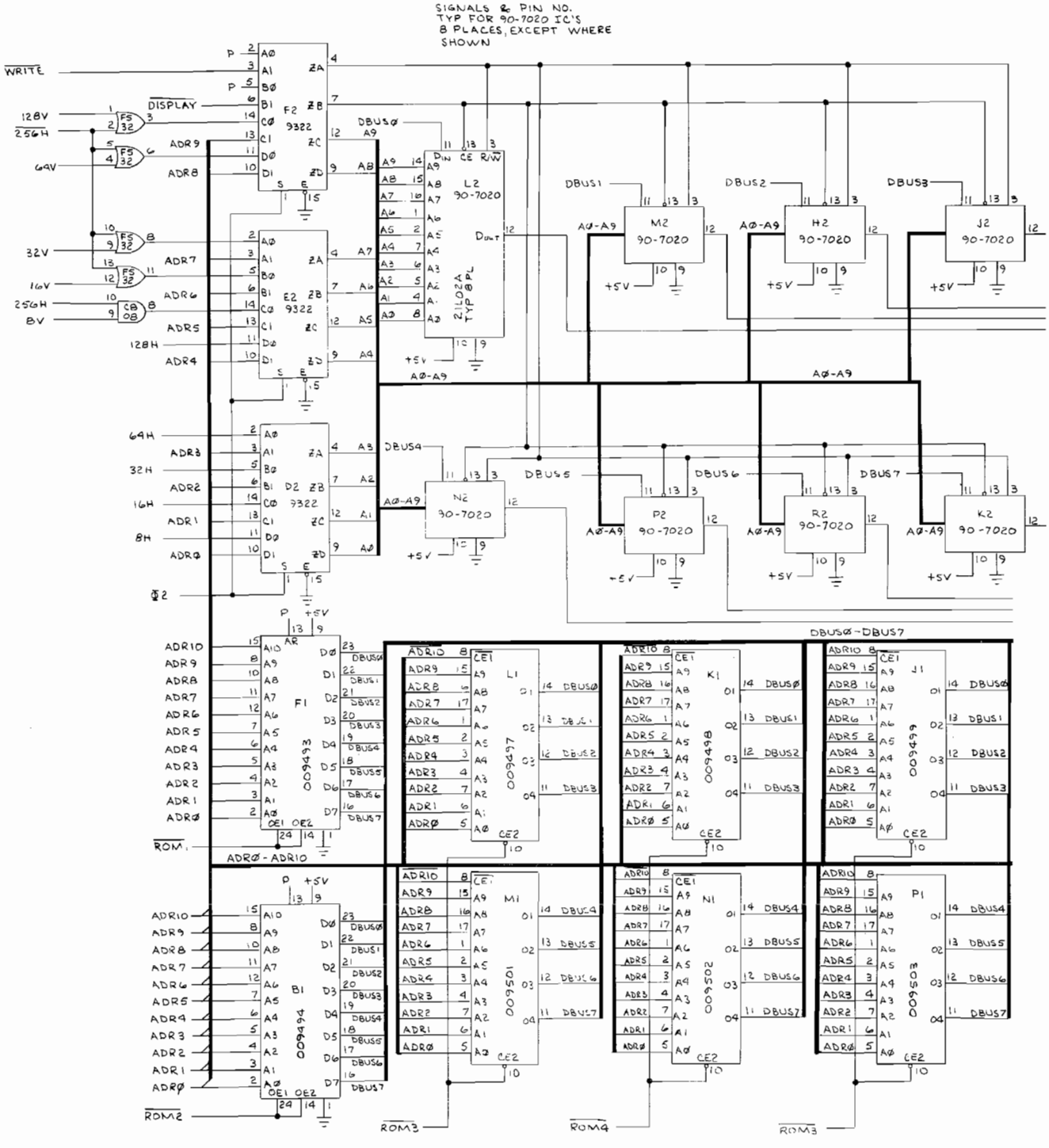
SIGNALS & PIN NO.
TYP FOR 90-7020 IC'S
8 PLACES, EXCEPT WHERE
SHOWN
WRITE
DISPLAY
128V
256H
64V
32V
16V
256H
8V
128H
64H
32H
16H
8H
Φ2
F2 9322
E2 9322
D2 9322
L2 90-7020
21L02A TYP 8PL
M2 90-7020
H2 90-7020
J2 90-7020
N2 90-7020
P2 90-7020
R2 90-7020
K2 90-7020
DBUSØ
DBUS1
DBUS2
DBUS3
DBUS4
DBUS5
DBUS6
DBUS7
AØ-A9
+5V
F1 009493
B1 009494
L1 009497
M1 009501
K1 009498
N1 009502
J1 009499
P1 009503
ADRØ-ADR10
DBUSØ-DBUS7
ROM1
ROM2
ROM3
ROM4
ROM3

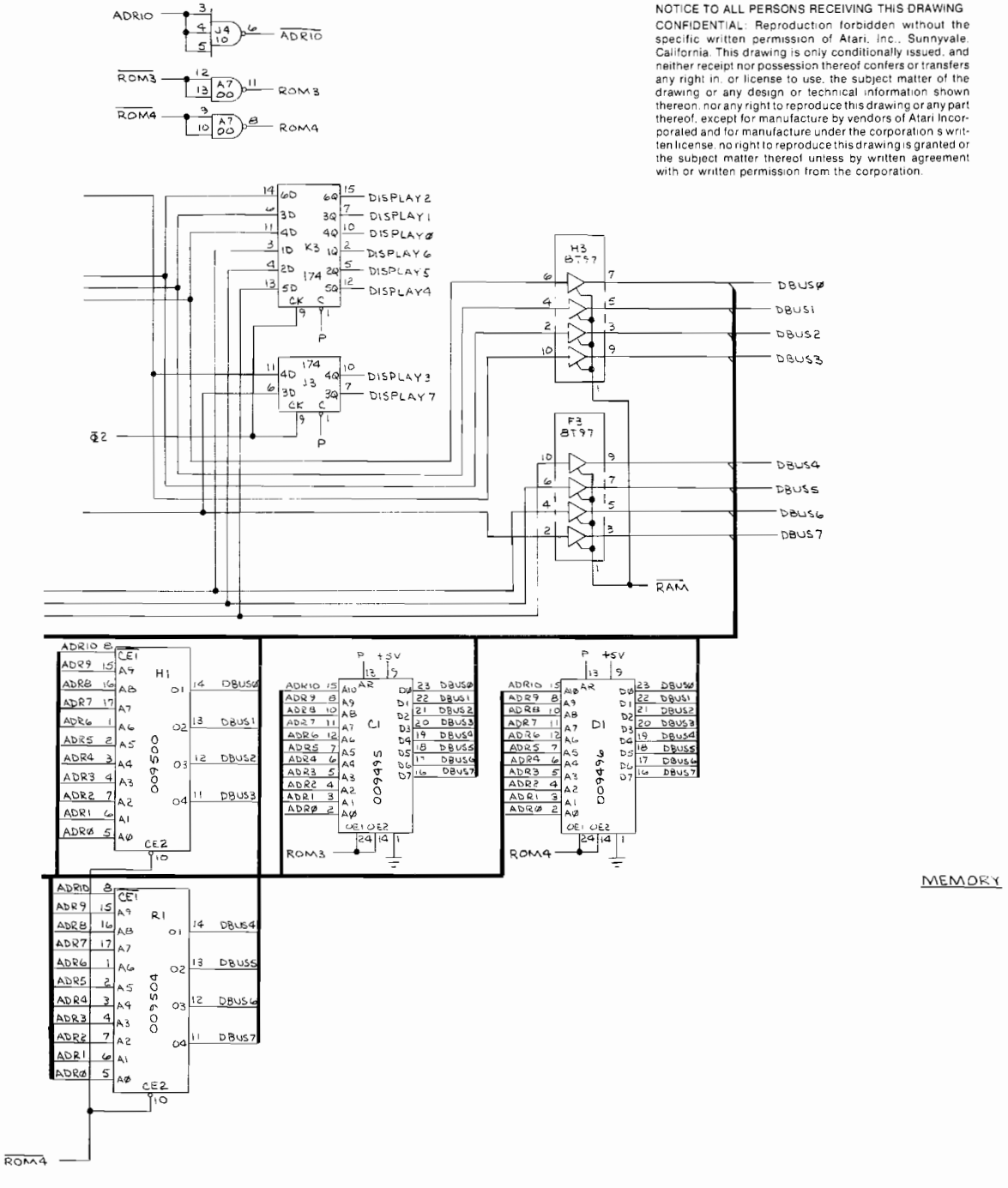

Figure 4-8 Canyon Bomber Schematic Diagram Sheet 3 of 5

NOTICE TO ALL PERSONS RECEIVING THIS DRAWING
CONFIDENTIAL Reproduction forbidden without the specific written permission of Atari, Inc., Sunnyvale, California. This drawing is only conditionally issued, and neither receipt nor possession thereof confers or transfers any right in, or license to use, the subject matter of the drawing or any design or technical information shown thereon, nor any right to reproduce this drawing or any part thereof, except for manufacture by vendors of Atari Incorporated and for manufacture under the corporation's written license, no right to reproduce this drawing is granted or the subject matter thereof unless by written agreement with or written permission from the corporation.

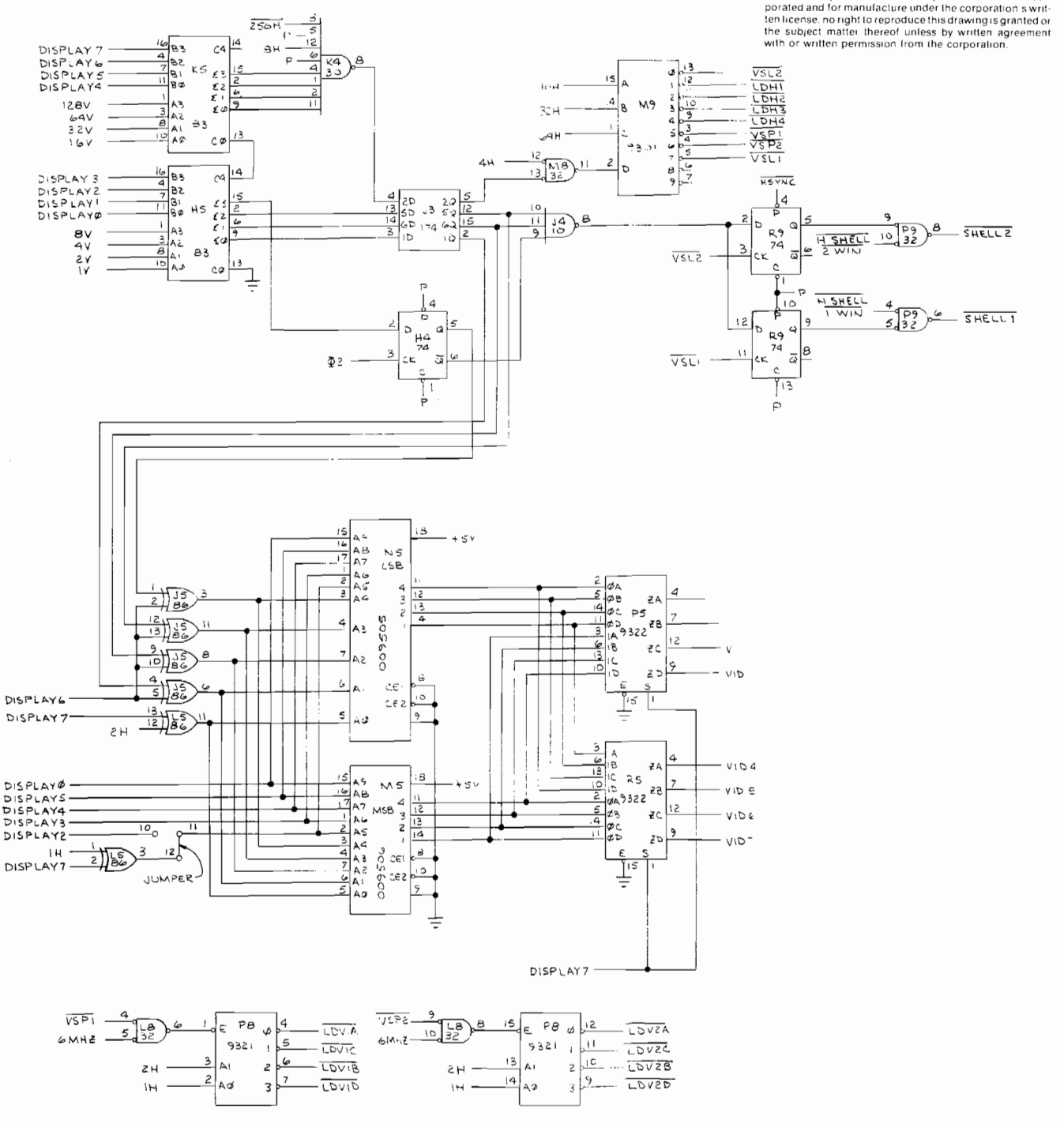

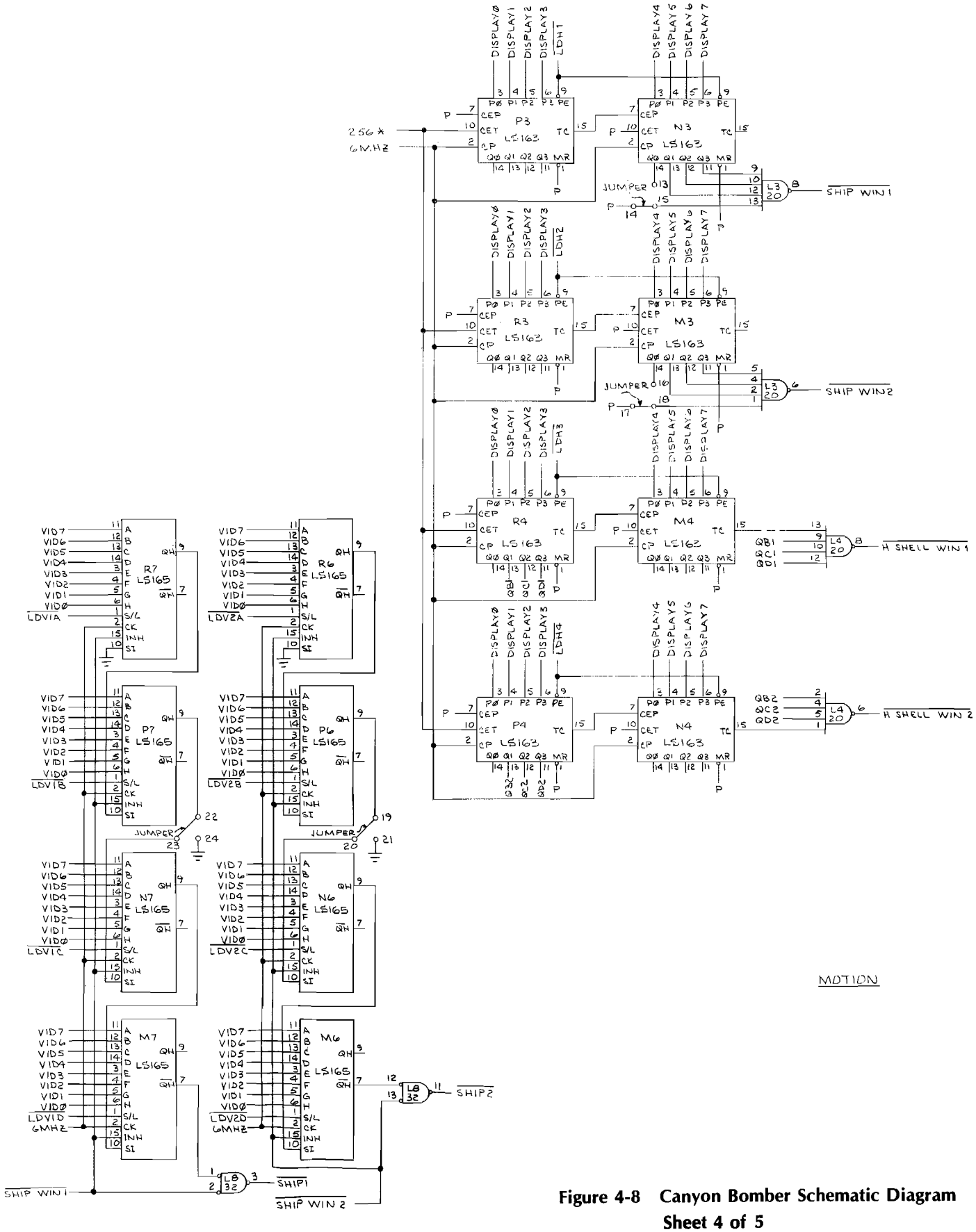

Figure 4-8 Canyon Bomber Schematic Diagram
Sheet 4 of 5

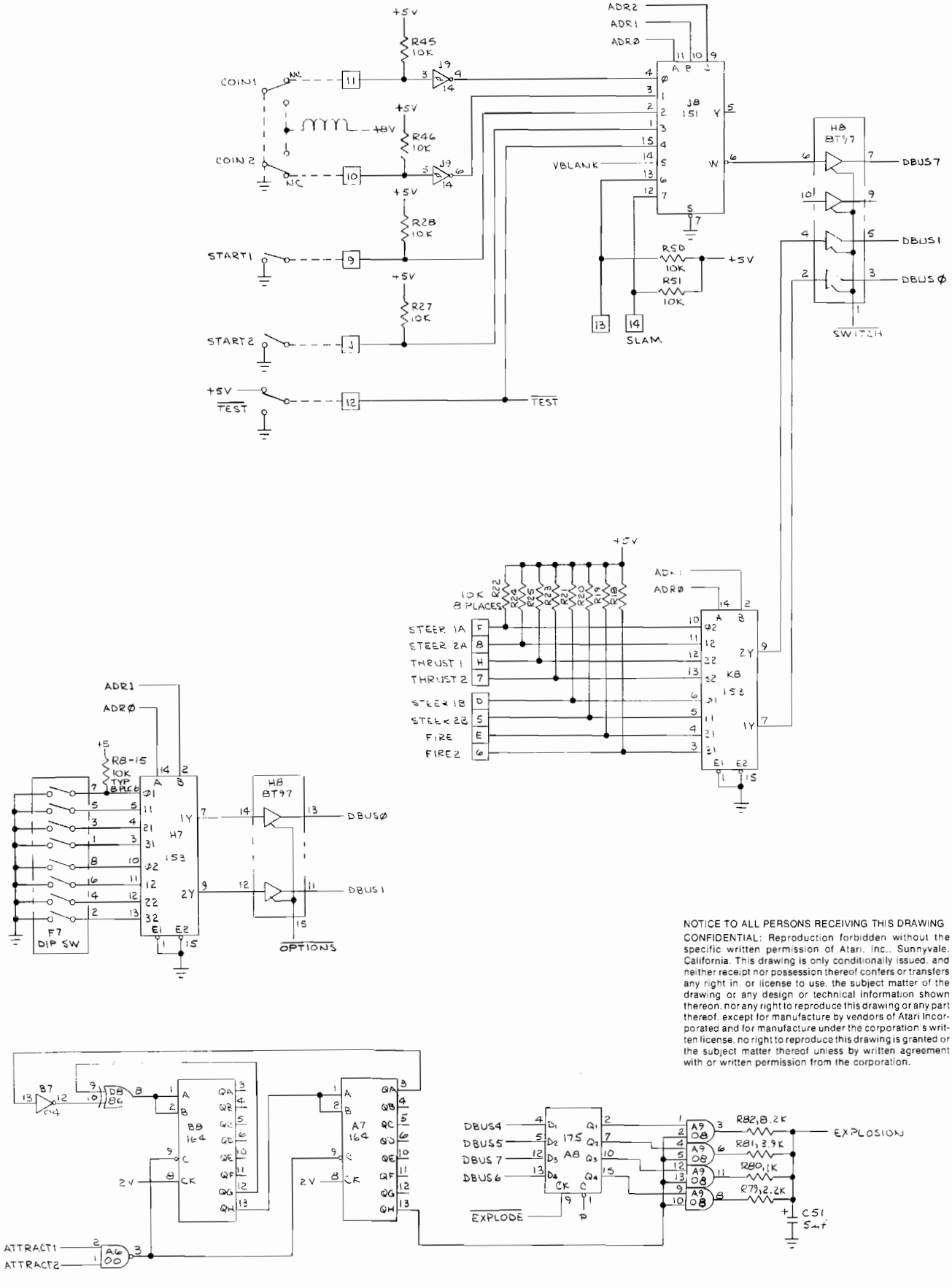

NOTICE TO ALL PERSONS RECEIVING THIS DRAWING
CONFIDENTIAL: Reproduction forbidden without the specific written permission of Atari, Inc., Sunnyvale, California. This drawing is only conditionally issued, and neither receipt nor possession thereof confers or transfers any right in, or license to use, the subject matter of the drawing or any design or technical information shown thereon, nor any right to reproduce this drawing or any part thereof, except for manufacture by vendors of Atari Incorporated and for manufacture under the corporation's written license. no right to reproduce this drawing is granted or the subject matter thereof unless by written agreement with or written permission from the corporation.

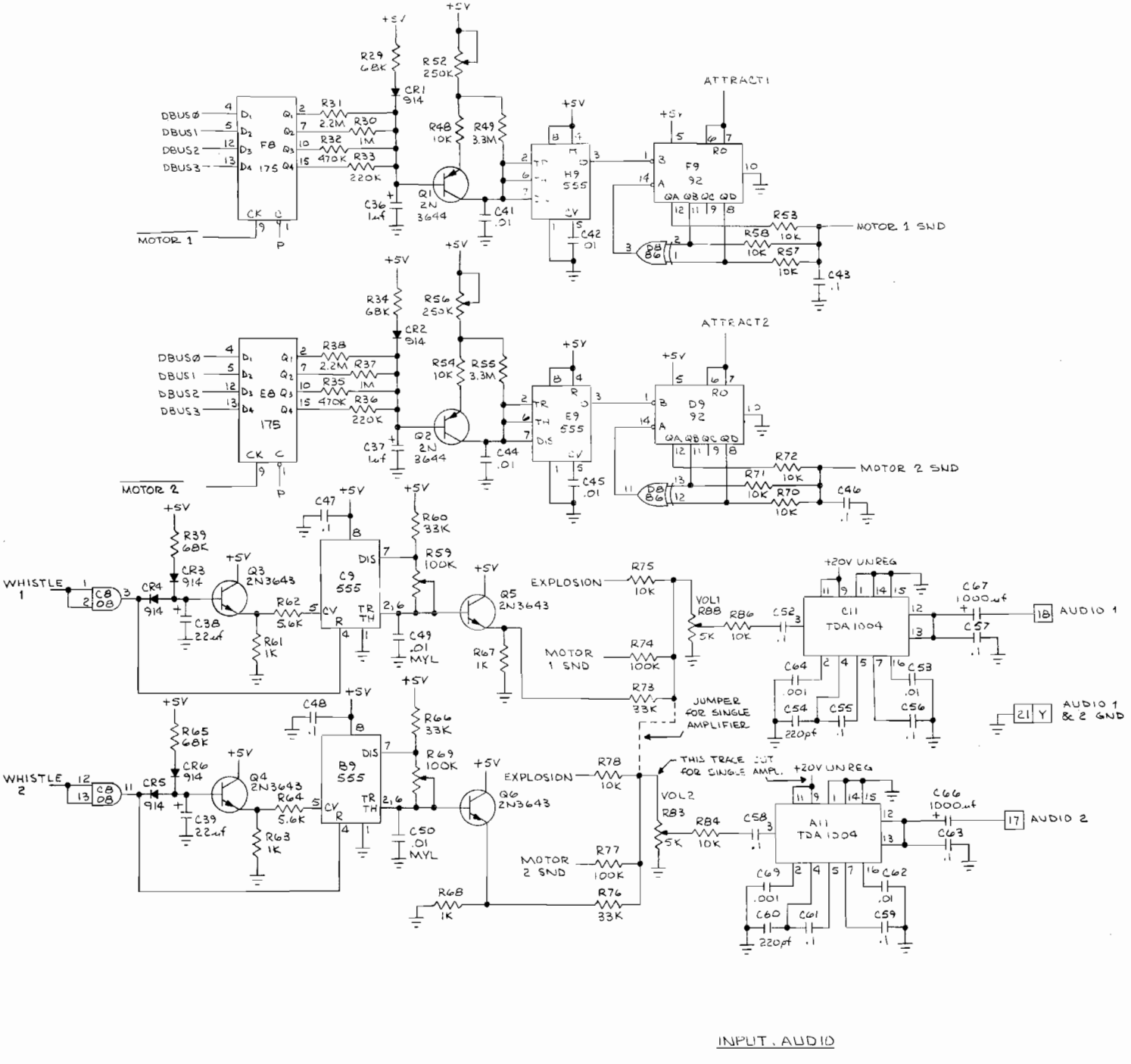

INPUT . AUDIO

Figure 4-8 Canyon Bomber Schematic Diagram
Sheet 5 of 5

NOTICE TO ALL PERSONS RECEIVING THIS DRAWING
CONFIDENTIAL: Reproduction forbidden without the specific written permission of Atari, Inc., Sunnyvale, California. This drawing is only conditionally issued, and neither receipt nor possession thereof confers or transfers any right in, or license to use, the subject matter of the drawing or any design or technical information shown thereon, nor any right to reproduce this drawing or any part thereof, except for manufacture by vendors of Atari Incorporated and for manufacture under the corporation's written license, no right to reproduce this drawing is granted or the subject matter thereof unless by written agreement with or written permission from the corporation.

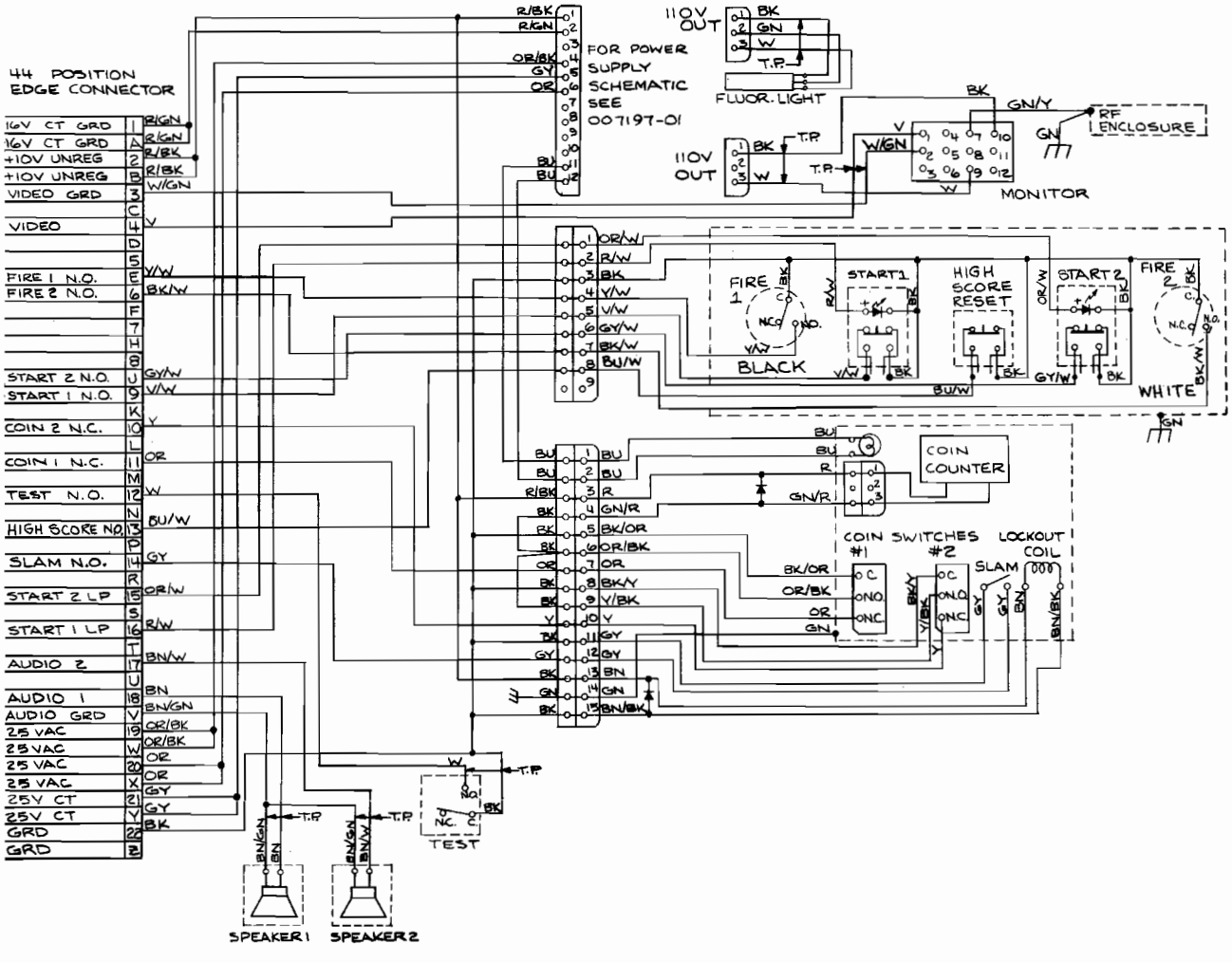

Figure 4-9 Harness Schematic

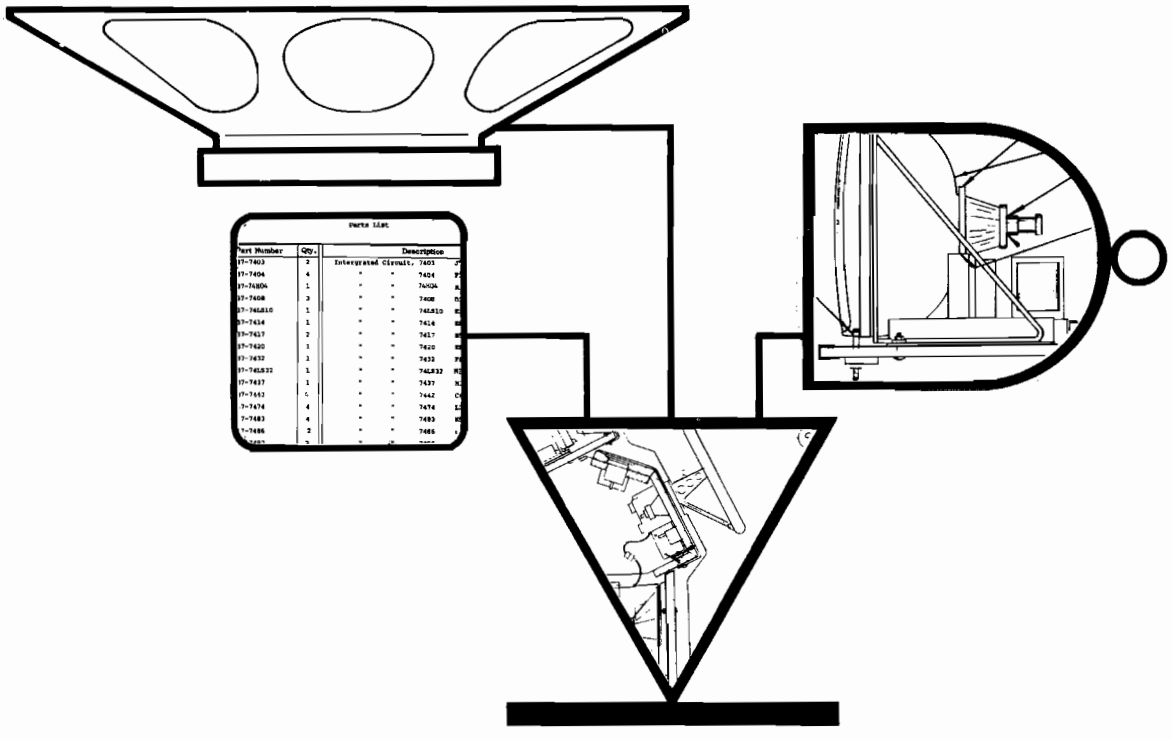

ILLUSTRATED PARTS CATALOG

This parts catalog constitutes Chapter 5 of Canyon Bomber™ Operation, Maintenance and Service Manual. The purpose of this catalog is to provide you with the necessary information for ordering replacement parts for the Canyon Bomber game.

When ordering parts from your distributor, give the part number, part name, applicable page number of this catalog, and the serial number of your Canyon Bomber game (see inside front cover of this manual). This will help to avoid confusion and mistakes in your order. We hope the results will be less downtime and more profit from your game.

If there are any questions about this catalog, please contact our Customer Service Department. You may call them Monday through Friday from 7:30 a.m. to 4:00 p.m. Pacific Time at one of the following numbers:

from *inside* California, Alaska or Hawaii, call
(408) 984-1900

from the remaining 47 states, call toll-free
(800) 538-6892

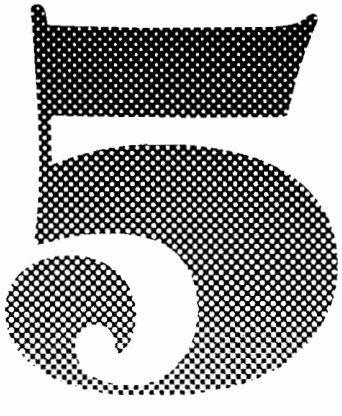

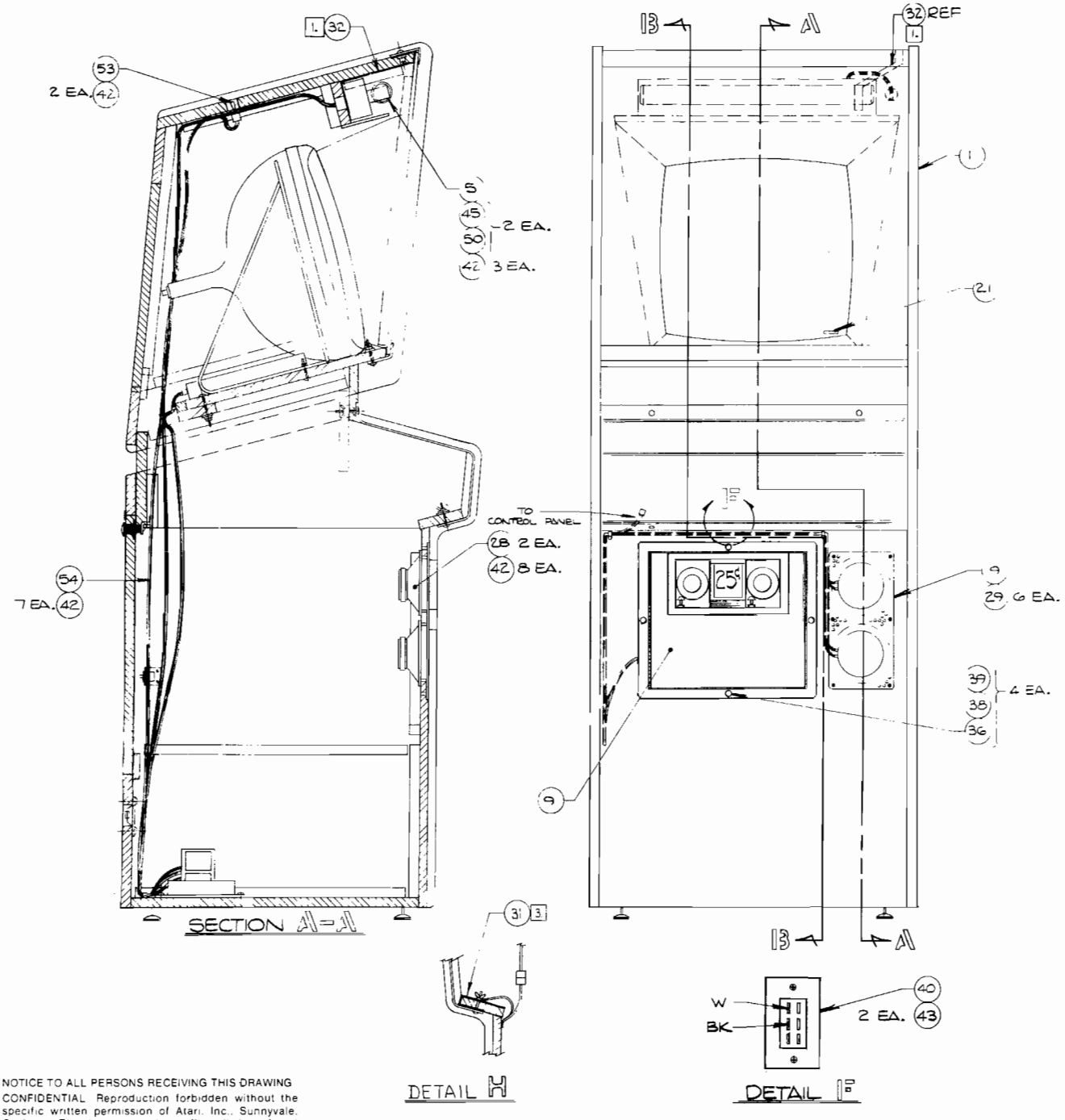

NOTICE TO ALL PERSONS RECEIVING THIS DRAWING CONFIDENTIAL Reproduction forbidden without the specific written permission of Atari, Inc., Sunnyvale, California. This drawing is only conditionally issued, and neither receipt nor possession thereof confers or transfers any right in, or license to use, the subject matter of the drawing or any design or technical information shown thereon, nor any right to reproduce this drawing or any part thereof, except for manufacture by vendors of Atari incorporated and for manufacture under the corporation's written license. no right to reproduce this drawing is granted or the subject matter thereof unless by written agreement with or written permission from the corporation.

Figure 5-1 Canyon Bomber Final Assembly
A008911-01 D

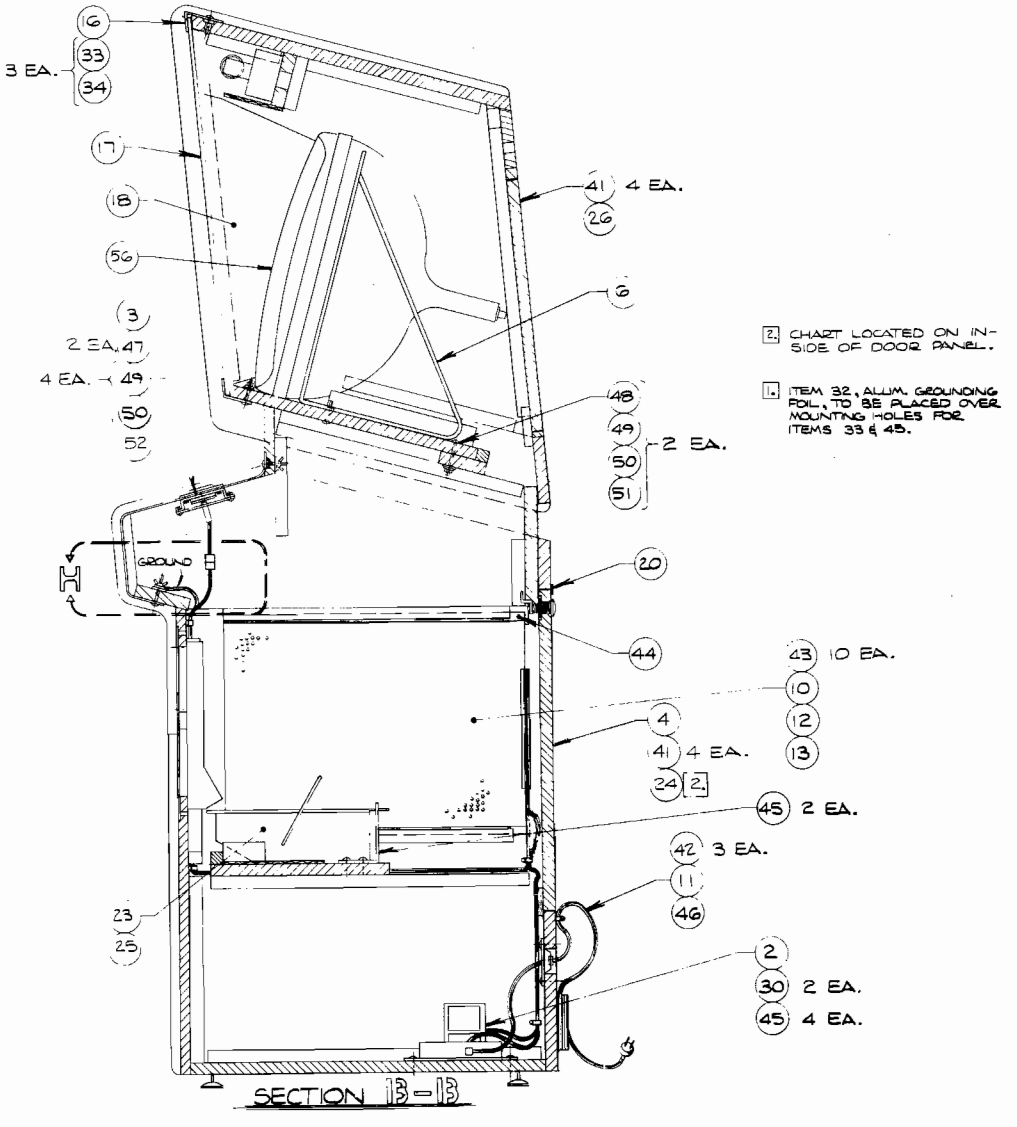

ITEMS NOT SHOWN
8 14 15

NOTICE TO ALL PERSONS RECEIVING THIS DRAWING
CONFIDENTIAL: Reproduction forbidden without the specific written permission of Atari, Inc., Sunnyvale, California. This drawing is only conditionally issued, and neither receipt nor possession thereof confers or transfers any right in, or license to use, the subject matter of the drawing or any design or technical information shown thereon, nor any right to reproduce this drawing or any part thereof, except for manufacture by vendors of Atari Incorporated and for manufacture under the corporation's written license, no right to reproduce this drawing is granted or the subject matter thereof unless by written agreement with or written permission from the corporation.

Figure 5-1 Canyon Bomber Final Assembly
A008911-01 D

ATARI®

Figure 5-1 Canyon Bomber Final Assembly Parts List

Item	Part Number	Qty.	Description
1	A006871-04	1	Cabinet Assembly W/Graphics
2	A007197-01	1	Power Supply Assembly, Type B
3	A008913-01	1	Control Panel Assembly
4	A006877-02	1	Lower Rear Door Assembly W/Lock
5	A006917-07	1	Fluorescent Light Assembly
6	A006885-01	1	T.V. Shelf Assembly
7		1	
8	A009002-XX	1	Shipping Container Assembly
9	A009083-01	1	Coin Door Assembly
10	A009262-03	1	R.F. Shield Box Assembly
11	A007784-01	1	Power Cord Assembly, Strain Relief
12	A009512-01	1	R.F. Shield P.C.B. Assembly
13	A008314-02	1	P.C.Bd. Assembly, Canyon Bomber
14	006305-01	1	Printed Poly Bag
15	TM-097	1	Tech. Manual/Illustrated Parts Catalog
16	006873-01	1	Retainer, Plexiglas
17	008917-01	1	Plexiglas Shield W/Graphics
18	009010-02	1	Bezel, Cardboard
19	009011-01	1	Speaker, Grill Cover
20	005233-01	1	Rear Door Seal
21	006319-02	1	Copyright Decal
22			
23	A007902-01	1	Cash Box Assembly
24	ST-097	1	Self Test Chart
25	006870-01	1	Coin Box Bracket
26	006852-01	1	Upper Service Panel
27			
28	48-004	2	Speakers, 5"
29	73-77004	6	Rivets, 3/16" O.D. x .68 Lg. (.250 x .500 Grip)
30	46-201302	2	Fuses, 3 AMP
31	78-6601216	1	Alum. Foil, 1" Wide x 5" Long
32	78-6601216	1	Alum. Foil, 1" Wide x 15" Lg. Approx
33	82-8016	3	Screws, Button Hd. Socket Cap #10-32 x 1.00 Lg.
34	75-99090006	3	Well Nuts, Blind Hole Fastener #10-32
35			
36	75-5516B	4	Carriage Bolts, #¼ x 1.00 Lg (Black)
37			
38	75-015S	4	Washers, Flat #¼
39	75-990505S	4	Hex Nuts, ¼-20, Nylon Locking

ATARI®

Figure 5-1 Canyon Bomber Final Assembly Parts List

Item	Part Number	Qty.	DESCRIPTION
40	A006548-01	1	Test Switch Assembly
41	82-1824	8	Wood Screws, #8 x 1½ Lg. Ft. Hd. Phil.
42	72-6610	26	Screw, Sm. Pan. Hd. Phil #6 x 5/8 Lg.
43	72-6608	14	Screws, Sm. Pan. Hd. Phil #6 x ½ Lg.
44	72-6808	1	Screw, Sm. Pan. Hd. Phil #8 x ½ Lg.
45	72-6812	8	Screw, Sm. Pan. Hd. Phil #8 x 3/4 Lg.
46	78-25001	1	Screw Down Tie Wraps
47	75-5120B	2	Carriage Bolts, #10-24 x 1.25 Lg.
48	75-5132N	2	Carriage Bolts, #10-24 x 2.00 Lg.
49	75-040	6	Washers, Split-Lock, #10
50	75-010S	6	Washers, Flat #10
51	75-911S	2	Hex Nuts, #10-24
52	75-931S	4	Wing Nuts, #10-24
53	A009511-01	1	Power Switches & Harness Assembly
54	A009268-01	1	Main Harness Assembly
56	009024-01	1	Vacuum Formed Overlay with Graphics

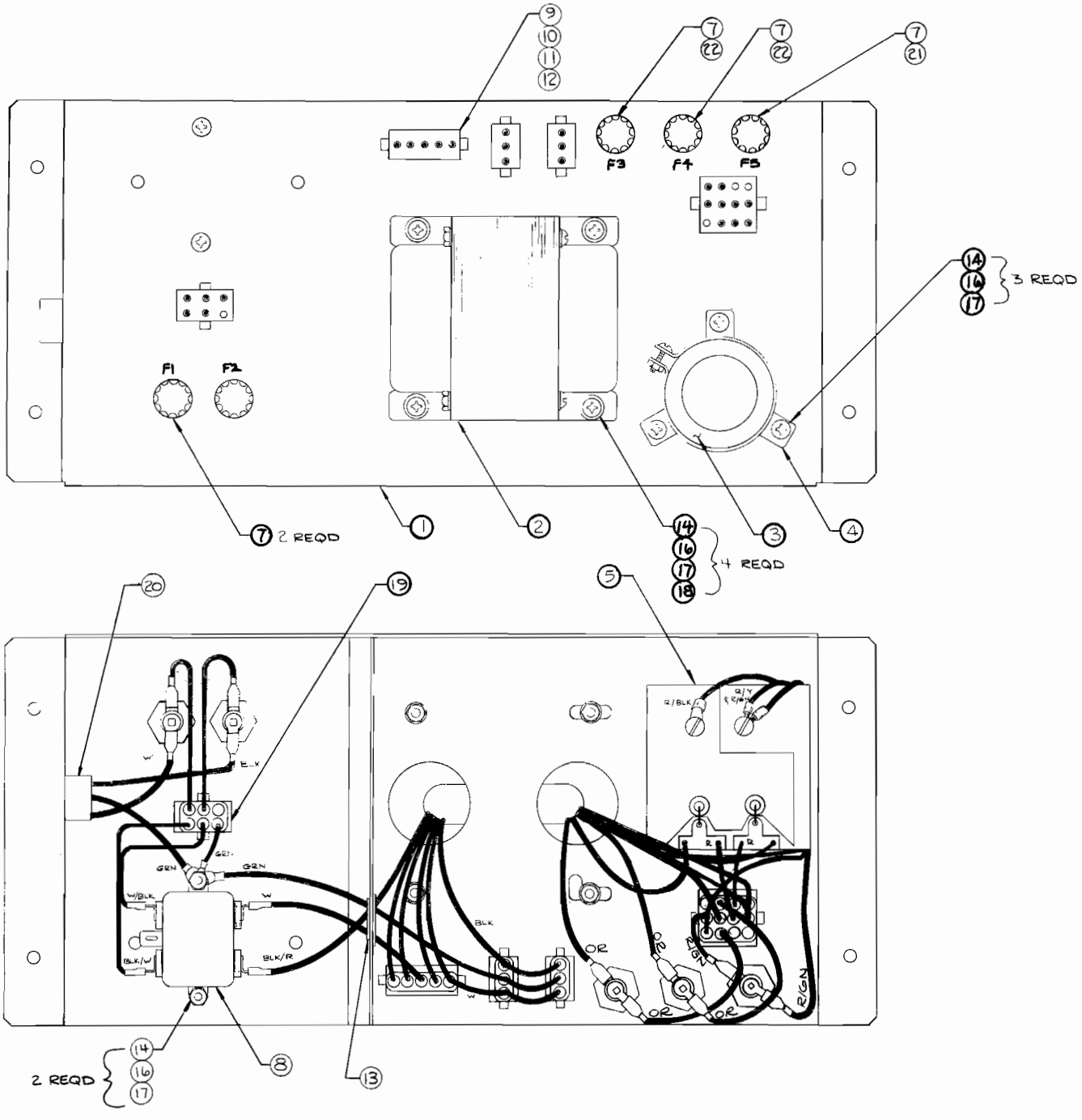

NOTICE TO ALL PERSONS RECEIVING THIS DRAWING

CONFIDENTIAL. Reproduction forbidden without the specific written permission of Atari, Inc., Sunnyvale, California. This drawing is only conditionally issued, and neither receipt nor possession thereof confers or transfers any right in, or license to use, the subject matter of the drawing or any design or technical information shown thereon, nor any right to reproduce this drawing or any part thereof, except for manufacture by vendors of Atari Incorporated and for manufacture under the corporation's written license, no right to reproduce this drawing is granted or the subject matter thereof unless by written agreement with or written permission from the corporation.

Figure 5-2 Power Supply Assembly
A007197-01 D

Figure 5-2 Power Supply Assembly
Parts List

Item	Part Number	Qty.	Description
1	A009266-01	1	Power Supply Base Weldment Assembly
2	A006886-01	1	Transformer Termination Assembly "Type B"
3	29-053	1	Cap., Sprague Electrolytic 26,000uf @ 15V
4	78-70501SC	1	Brkt., Cap. Mtg. Sprague #4586-48
5	A006555-01	1	P.C. Board Rectifier
6			
7	79-4411004	5	Fuse Holder, Panel Mounting
8	41-2003	1	Filter, Power Line, 5 AMP
9	A006958-01	A/R	Volt Sel Block 95V
10	A006958-02	"	Volt Sel Block 110V
11	A006958-03	"	Volt Sel Block 205V
12	A006958-04	"	Volt Sel Block 220V
13	78-2708	1	Grommet,Plastic
14	72-1810S	9	Screw Pan Hd., #8-32 x 5/8"Lg.
15			
16	75-048	9	Washer, Split-Lock #8
17	75-918S	9	Nut Hex #8
18	75-018S	4	Washer Flat #8
19	A007192-01	1	Power Switch Termination
20	A007444-01	1	Power In Harness
21	46-203801	1	Fuse, 8 AMP, 125V, 3 AG Fast Acting
22	46-201251	2	Fuse, 2½ AMP, 125V, Slow Acting

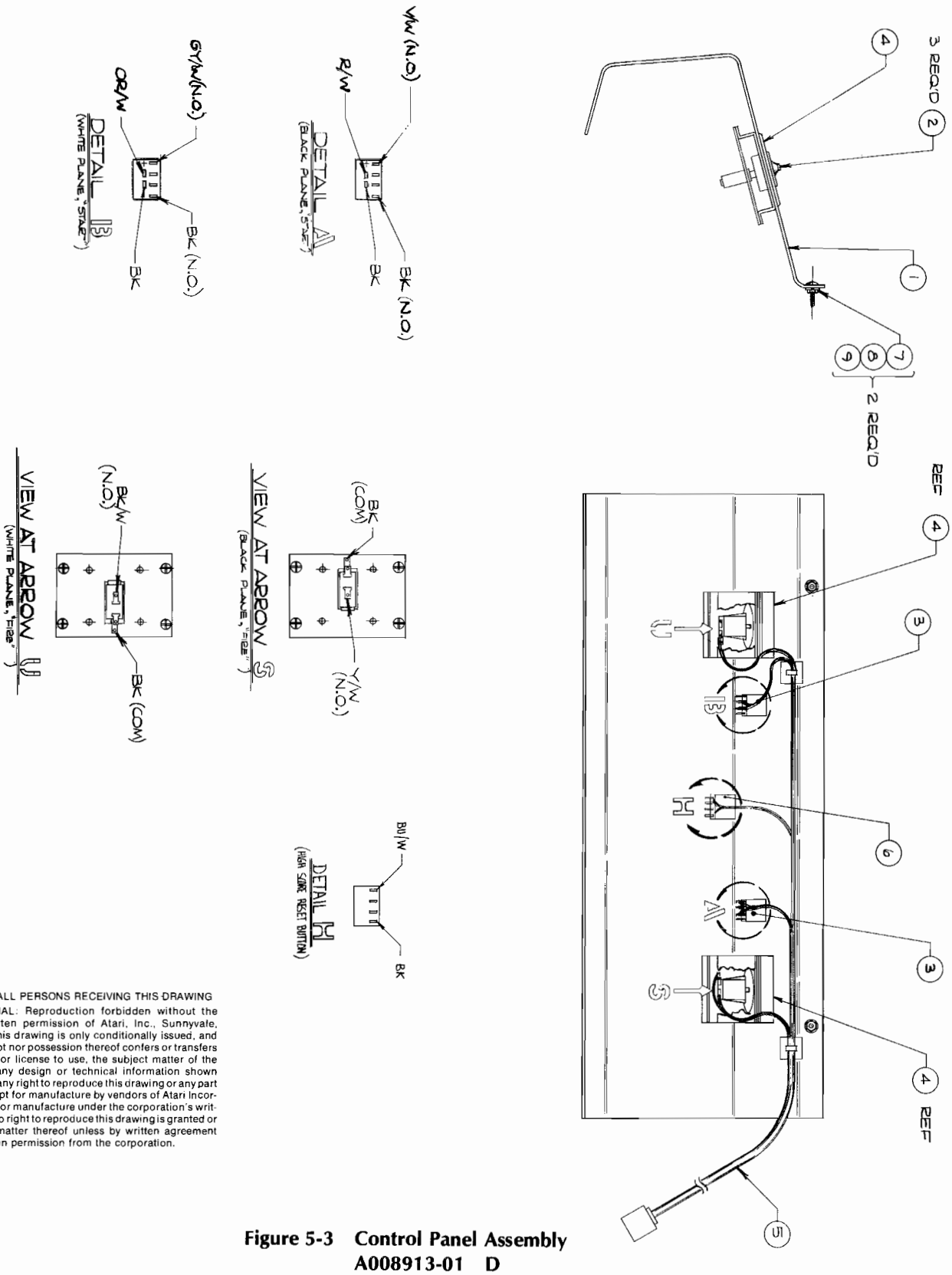

NOTICE TO ALL PERSONS RECEIVING THIS DRAWING
CONFIDENTIAL: Reproduction forbidden without the specific written permission of Atari, Inc., Sunnyvale, California. This drawing is only conditionally issued, and neither receipt nor possession thereof confers or transfers any right in, or license to use, the subject matter of the drawing or any design or technical information shown thereon, nor any right to reproduce this drawing or any part thereof, except for manufacture by vendors of Atari Incorporated and for manufacture under the corporation's written license, no right to reproduce this drawing is granted or the subject matter thereof unless by written agreement with or written permission from the corporation.

Figure 5-3 Control Panel Assembly A008913-01 D

ATARI®

Figure 5-3 Control Panel Assembly Parts List

Item	Part Number	Qty.	Description
1	008915-01	1	Control Panel W/Graphics
2	001856-01	3	Bushing, Alum
3	62-002	2	Led Switches, Lighted
4	A009338-01	2	Fire Button Assembly See Figure 5-4
5	A009269-01	1	Control Harness Assembly, Canyon Bomber
6	62-009	1	Switch, Licon (Blk. Cap)
7	75-5120BX	2	Carriage Bolts, #10-24 x 1.25 Black
8	75-040	2	Lock Washer, #¼ Split
9	75-911S	2	Hex Nuts, #10-24

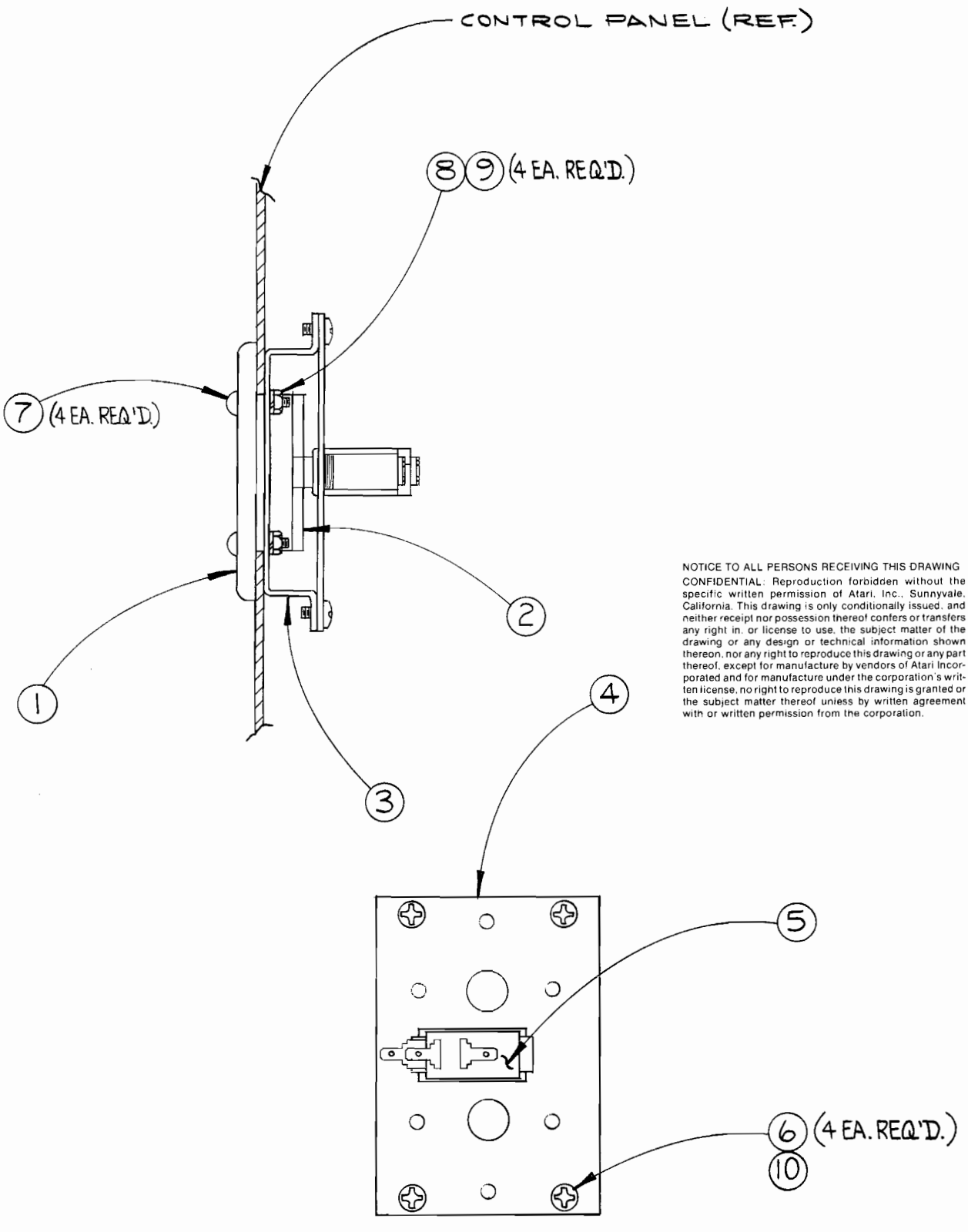

NOTICE TO ALL PERSONS RECEIVING THIS DRAWING
CONFIDENTIAL: Reproduction forbidden without the specific written permission of Atari, Inc., Sunnyvale, California. This drawing is only conditionally issued, and neither receipt nor possession thereof confers or transfers any right in, or license to use, the subject matter of the drawing or any design or technical information shown thereon, nor any right to reproduce this drawing or any part thereof, except for manufacture by vendors of Atari Incorporated and for manufacture under the corporation's written license, no right to reproduce this drawing is granted or the subject matter thereof unless by written agreement with or written permission from the corporation.

Figure 5-4 Fire Button Assembly
A009338-01 C

Figure 5-4 Fire Button Assembly Parts List

Item	Part Number	Qty.	Description
1	006530-01	1	BEZEL
2	006535-01	1	BUTTON
3	006532-01	1	CHASSIS
4	006533-02	1	SWITCH, MOUNTING PLATE
5	62-020	1	SWITCH, CHERRY E68-50A
6	72-1603	4	MACH., SCREW #6-32 x 3/16 LG PAN HD PHIL
7	82-8808B	4	MACH., SCREW #8-32 x 1/2 LG ALLEN SOCKET HEAD
8	75-918s	4	NUT, 8-32
9	75-048	4	WASHER, #8 SPLIT LOCK
10	75-046	4	WASHER, #6 SPLIT LOCK

NOTICE TO ALL PERSONS RECEIVING THIS DRAWING
CONFIDENTIAL: Reproduction forbidden without the specific written permission of Atari, Inc., Sunnyvale, California. This drawing is only conditionally issued, and neither receipt nor possession thereof confers or transfers any right in, or license to use, the subject matter of the drawing or any design or technical information shown thereon, nor any right to reproduce this drawing or any part thereof, except for manufacture by vendors of Atari Incorporated and for manufacture under the corporation's written license. no right to reproduce this drawing is granted or the subject matter thereof unless by written agreement with or written permission from the corporation.

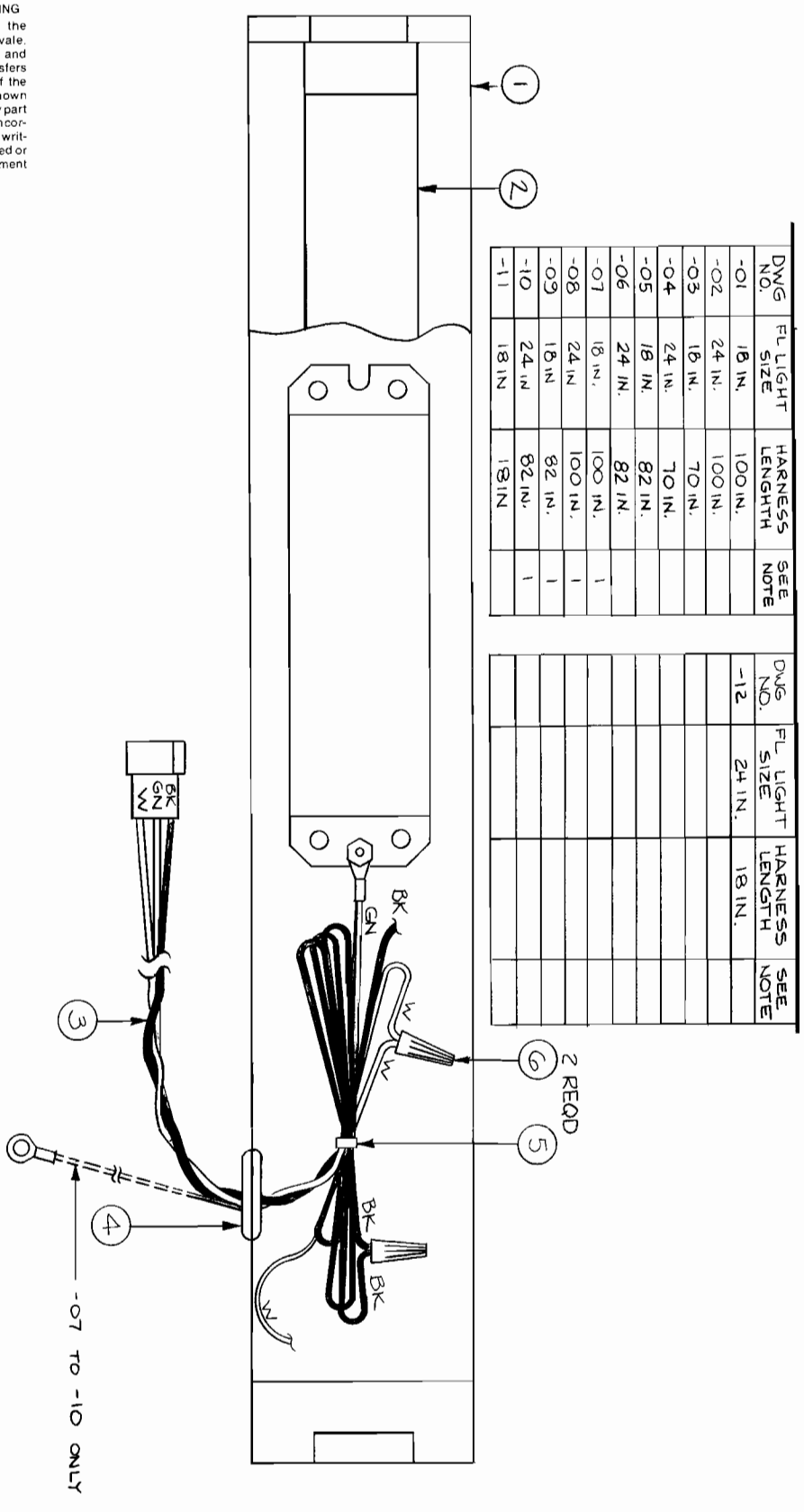

DWG NO.	FL LIGHT SIZE	HARNESS LENGTH	SEE NOTE
-01	18 IN.	100 IN.	
-02	24 IN.	100 IN.	
-03	18 IN.	70 IN.	
-04	24 IN.	70 IN.	
-05	18 IN.	82 IN.	
-06	24 IN.	82 IN.	
-07	18 IN.	100 IN.	1
-08	24 IN	100 IN.	1
-09	18 IN	82 IN.	1
-10	24 IN	82 IN.	1
-11	18 IN	18 IN	

DWG NO.	FL LIGHT SIZE	HARNESS LENGTH	SEE NOTE
-12	24 IN.	18 IN.	

Figure 5-5 Fluorescent Light Assembly A006917-07 C

Figure 5-5 Fluorescent Light Assembly Parts List

Item	Part Number	Qty.	Description
1	93-102	1	Gibson Fluorescent Fixture 24 Inch
2	70-301	1	Fluorescent Tube 24 Inch
3	A006916-05	1	Fluorescent Light Harness, 18"
4	78-2652	1	Grommet, Rubber
5	78-24001	A/R	Tie Wrap
6	79-561816	2	Wire Nut, Ideal 71-B

NOTICE TO ALL PERSONS RECEIVING THIS DRAWING
CONFIDENTIAL: Reproduction forbidden without the specific written permission of Atari, Inc., Sunnyvale, California. This drawing is only conditionally issued, and neither receipt nor possession thereof confers or transfers any right in, or license to use, the subject matter of the drawing or any design or technical information shown thereon, nor any right to reproduce this drawing or any part thereof, except for manufacture by vendors of Atari Incorporated and for manufacture under the corporation's written license, no right to reproduce this drawing is granted or the subject matter thereof unless by written agreement with or written permission from the corporation.

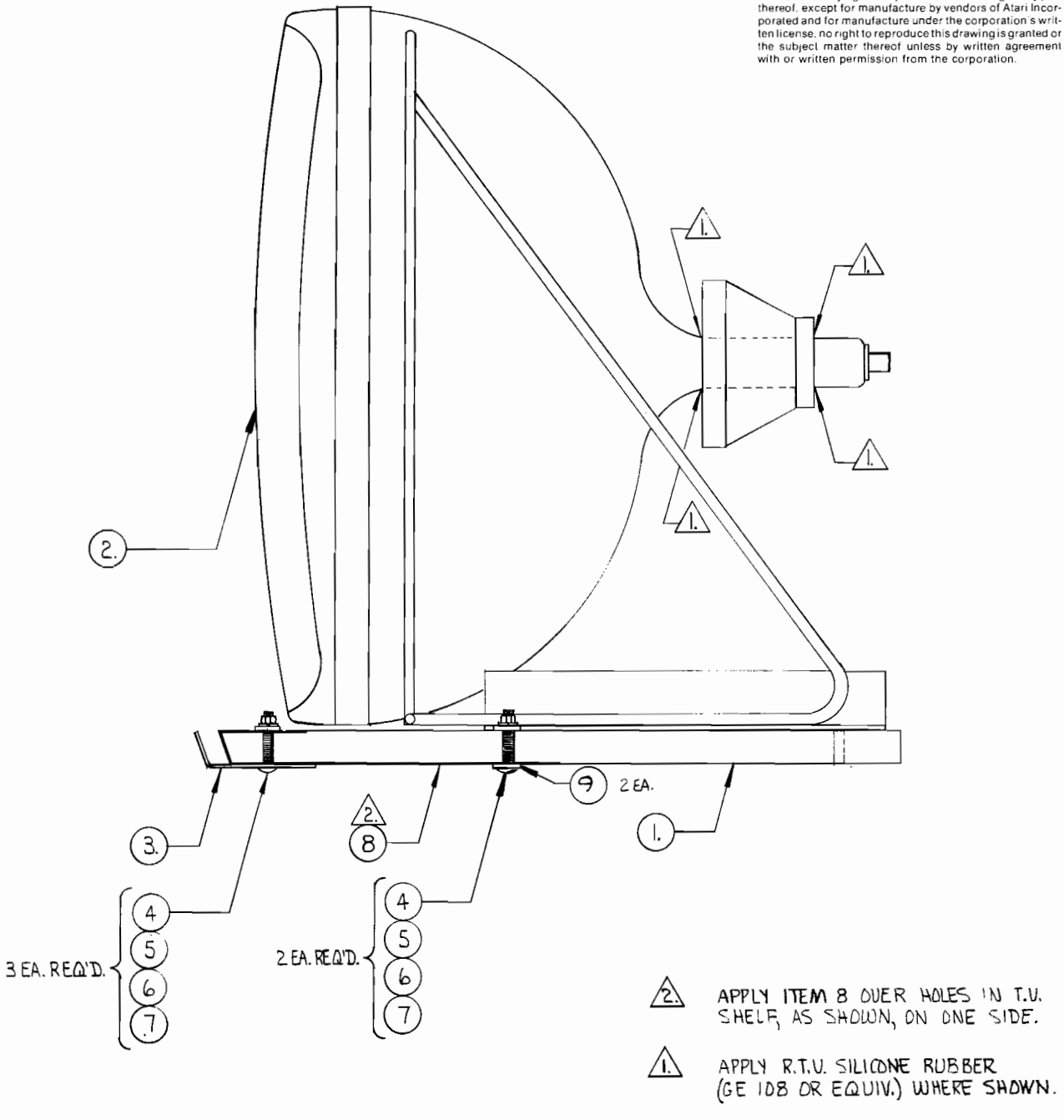

Figure 5-6 TV Shelf Assembly
A006885-01 C

Figure 5-6 TV Shelf Assembly Parts List

Item	Part Number	Qty.	Description
1	006857-01	1	T.V. Mounting Board
2	92-032	1	T.V. Monitor, 23"
3	006874-01	1	Plexiglas Retainer
4	75-5120B	5	Carriage Bolts, #10-24 x 1¼ Lg.
5	75-040	5	Washers, Split-Lock #10
6	75-010S	5	Washers, Flat, #10
7	75-911S	5	Hex Nuts, #10-24
8	78-6601216	1	Alum. Foil, 1" Wide x10" Lg. (Approx.)
9	75-015S	2	Flat Washer, #¼

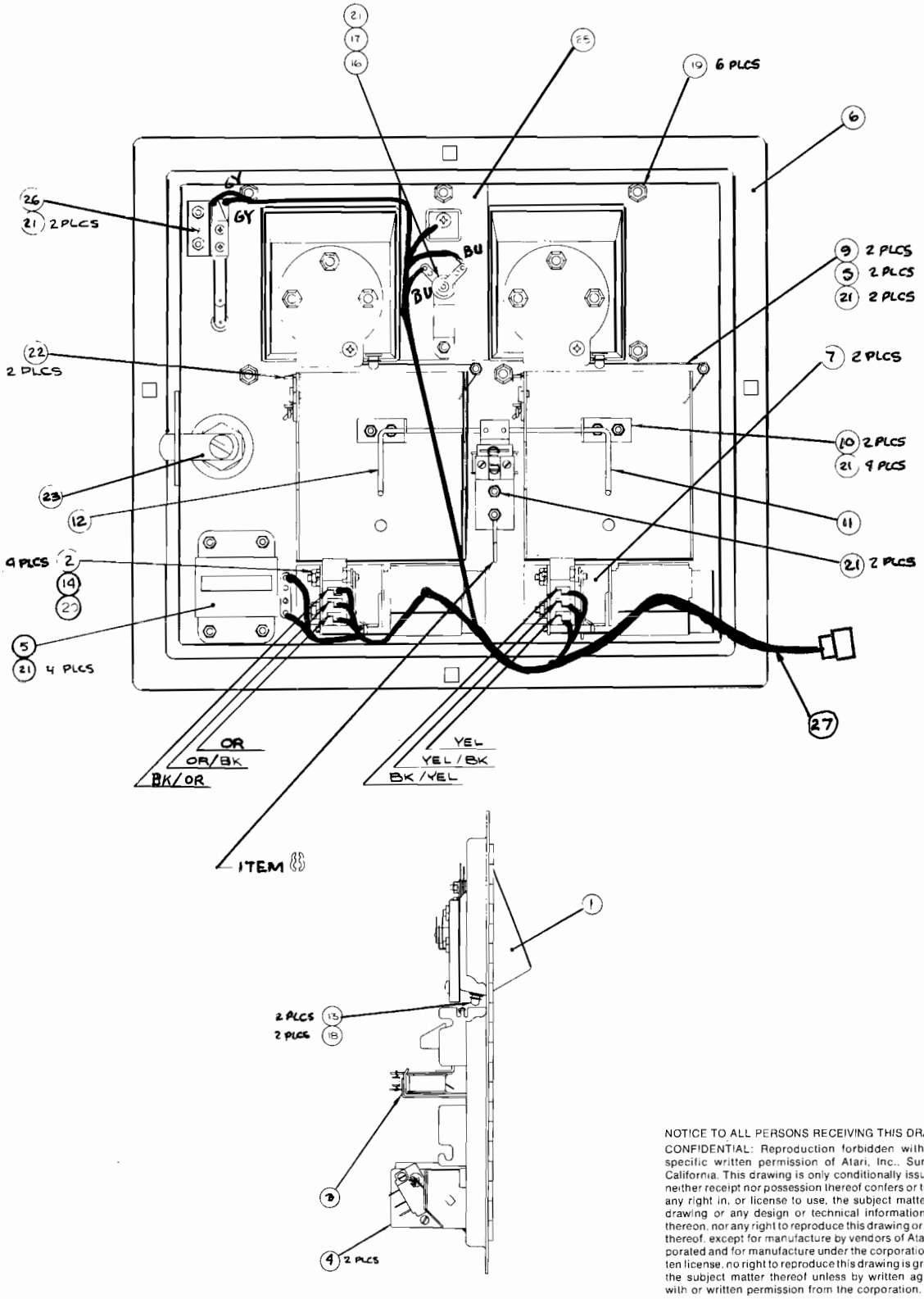

NOTICE TO ALL PERSONS RECEIVING THIS DRAWING
CONFIDENTIAL: Reproduction forbidden without the specific written permission of Atari, Inc., Sunnyvale, California. This drawing is only conditionally issued, and neither receipt nor possession thereof confers or transfers any right in, or license to use, the subject matter of the drawing or any design or technical information shown thereon, nor any right to reproduce this drawing or any part thereof, except for manufacture by vendors of Atari Incorporated and for manufacture under the corporation's written license, no right to reproduce this drawing is granted or the subject matter thereof unless by written agreement with or written permission from the corporation.

Figure 5-7 Coin Door Assembly
A006794-01 through -07 C

ATARI®

Figure 5-7 Coin Door Assembly Parts List

Item	Part Number	Qty.	Description
1	A007637-01	1	Front Bezel Assy. - Used only on -01 Coin Door Assy.
	A007637-02	Ref.	Front Bezel Assy. - Used only on -02 Coin Door Assy.
	A007637-03	Ref.	Front Bezel Assy. - Used only on -03 Coin Door Assy.
	A007637-04	Ref.	Front Bezel Assy. - Used only on -04 Coin Door Assy.
	A007637-05	Ref.	Front Bezel Assy. - Used only on -05 Coin Door Assy.
	A007637-06	Ref.	Front Bezel Assy. - Used only on -06 Coin Door Assy.
	A007637-07	Ref.	Front Bezel Assy. - Used only on -07 Coin Door Assy.
2	75-9165	4	Nut 6-32
3	A007639-01	1	Coin Lock-Out Assembly
4	A007640-01	2	Coin Switch Assembly
5	A002465-01	1	Coin Counter Assembly
6	004320-01	1	Coin Door Weldment
7	004341-01	2	Secondary Coin Chute
8	004344-01	1	Key Loop
9	004340-01	2	Spring-Return
10	004337-01	2	Bracket, Wire Form
11	004338-01	1	Lock-Out, Wire Form, R.H.
12	004336-01	1	Lock-Out, Wire Form, L.H.
13	004326-01	2	Button, Scavenger
14	75-046	4	Lock Washer, #6
15	006904-01	2	Spacer
16	007359-01	1	Lamp Socket
17	70-11-47	1	Lamp
18	73-3008	2	Retaining "C" Ring, Truarc #5103-25
19	75-9914001	6	Self-Threading Nut, Tinnerman #SR188006
20	75-026S	4	Washer #6
21	75-00516	13	Kepnut, Style 842, Stl., 6-32
22	008629-01	2	Spring
23	71-2118	1	Lock Assembly, Hudson Lock
24	71-1225CU	2	Coin Mechanism for American Quarter only
	71-125FB	Ref.	Coin Mechanism for Belgian 5 Francs Only
	71-121MG	Ref.	Coin Mechanism for German Mark only
	71-121KS	Ref.	Coin Mechanism for Swedish Krona Only
	71-12100YJ	Ref.	Coin Mechanism for Japanese 100 Yen Only
	71-1210PE	Ref.	Coin Mechanism for English 10 Pence Only
	71-1220CA	Ref.	Coin Mechanism for Australian 20-Cent Piece only
25	007753-01	1	Plate, Anti-Probe
26	A007638-01	1	Switch Assembly - Slam
27	A006921-01	1	Harness Assembly

NOTICE TO ALL PERSONS RECEIVING THIS DRAWING
CONFIDENTIAL: Reproduction forbidden without the specific written permission of Atari, Inc., Sunnyvale, California. This drawing is only conditionally issued, and neither receipt nor possession thereof confers or transfers any right in, or license to use, the subject matter of the drawing or any design or technical information shown thereon, nor any right to reproduce this drawing or any part thereof, except for manufacture by vendors of Atari Incorporated and for manufacture under the corporation's written license, no right to reproduce this drawing is granted or the subject matter thereof unless by written agreement with or written permission from the corporation.

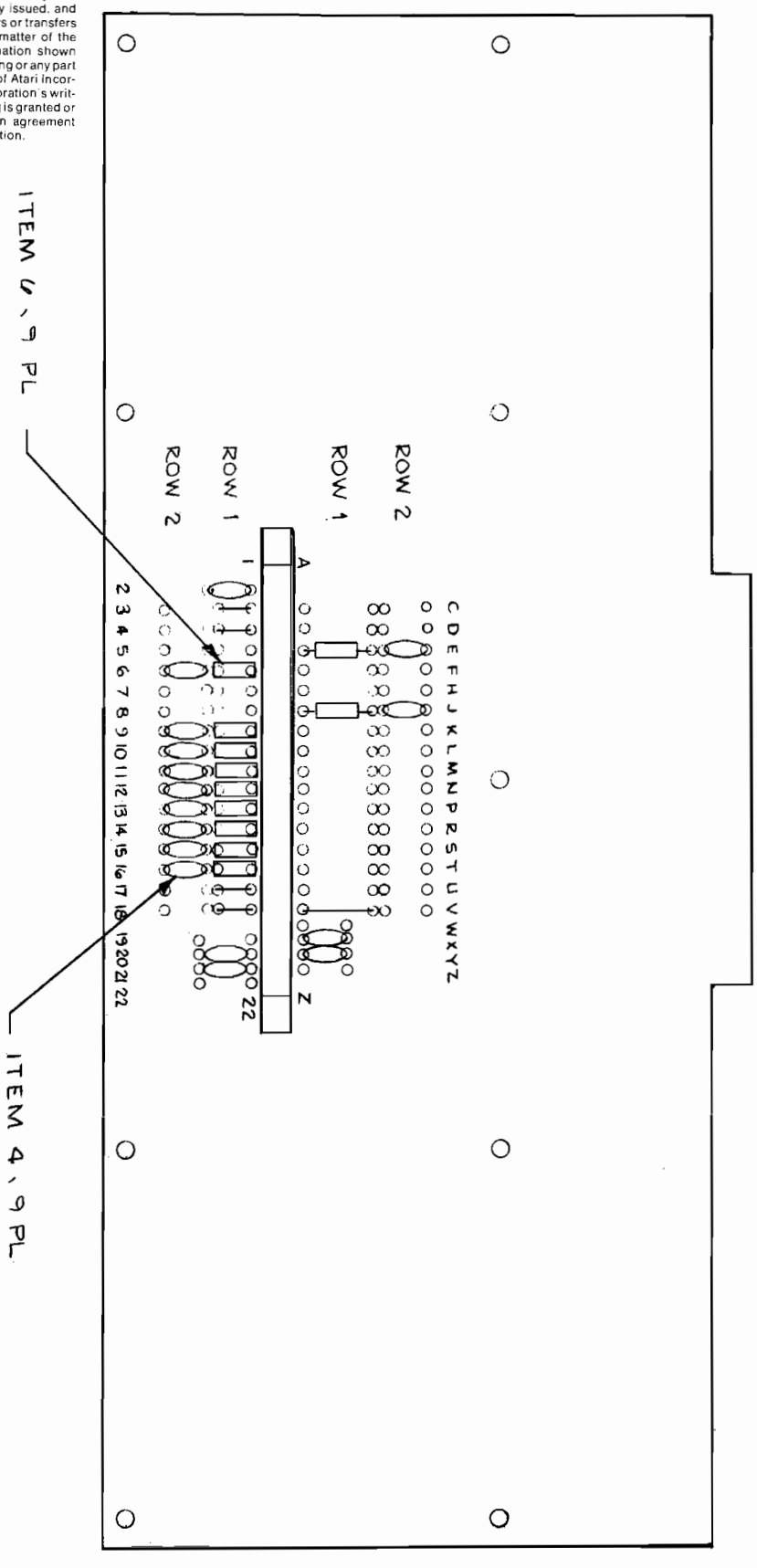

Figure 5-8 RF Shield PCB Assembly
A009512-01 D

ATARI®

Figure 5-8 RF Shield PCB Assembly Parts List

Item	Part Number	Qty.	Description
1	006549-01	1	P.C. Board
2	79-517222	1	Connector, 44 Pin P.C. Mount
3	27-250104	7	Cap, Cer Disc 0.1µf 25V (Large)
4	27-A250104	9	Cap, Cer Disc 0.1µf 25V (Small, Bottom Row)
5	41-3003	2	Inductor, 100µh (Large)
6	41-3004	9	Inductor, 100µh (Small, Bottom Row)
7	52-003	1	Jumper, .60 Centers
8	52-004	4	Jumper, .30 Centers

NOTICE TO ALL PERSONS RECEIVING THIS DRAWING
CONFIDENTIAL: Reproduction forbidden without the specific written permission of Atari, Inc., Sunnyvale, California. This drawing is only conditionally issued, and neither receipt nor possession thereof confers or transfers any right in, or license to use, the subject matter of the drawing or any design or technical information shown thereon, nor any right to reproduce this drawing or any part thereof, except for manufacture by vendors of Atari Incorporated and for manufacture under the corporation's written license, no right to reproduce this drawing is granted or the subject matter thereof unless by written agreement with or written permission from the corporation.

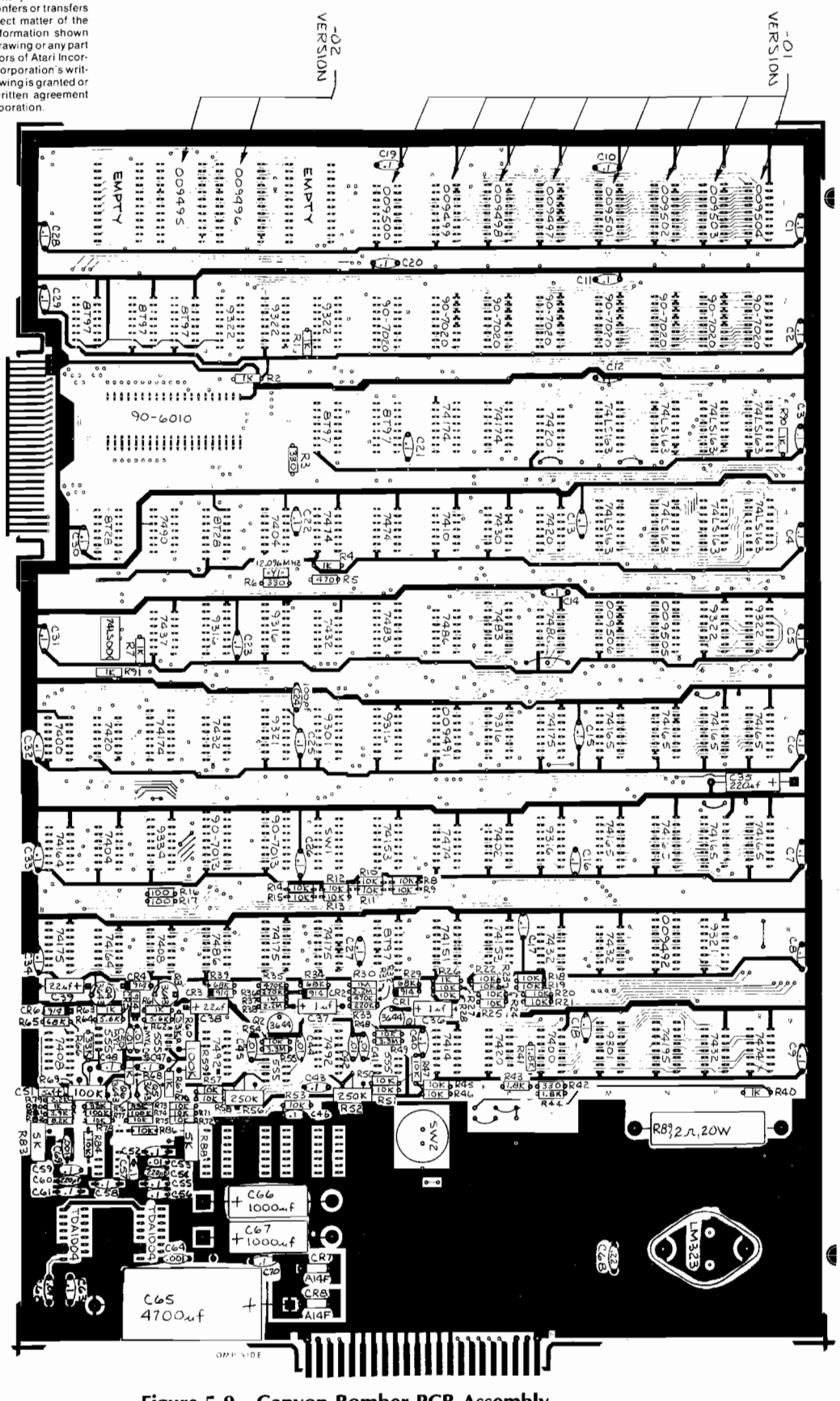

Figure 5-9 Canyon Bomber PCB Assembly
A008313-01 D

Figure 5-9 Canyon Bomber PCB Assembly Parts List PROM Version

ATARI®

Item	Part Number	Qty.	Description
1	008313-01	1	P.C. BOARD
2	10-5101	2	RES. CARBON, 5%, ¼W, 100 OHM R16,17
3	10-5102	13	" " " " 1K " R1,2,4,7,26 40,61,63,67 68,80,90,91
4	10-5103	35	" " " " 10K " R8-15,18-25 27,28,45-48 50,51,53,54 57,58,70-72, 84,86,75,78
5	10-5104	2	" " " " 100K " R74,77
6	10-5105	2	" " " " 1M " R30,37
7	10-5182	3	" " " " 1.8K " R41,43,44
8			
9	10-5222	1	" " " " 2.2K " R79
10	10-5224	2	" " " " 220K " R33,36
11	10-5225	2	" " " " 2.2M " R31,38
12	10-5331	3	" " " " 330 " R3,6,42
13	10-5392	1	" " " " 3.9K " R81
14	10-5335	2	" " " " 3.3M " R49,55
15	10-5471	1	" " " " 470 " R5
16	10-5474	2	" " " " 470K " R32,35
17	10-5562	2	" " " " 5.6K " R62,64
18	10-5683	4	" " " " 68K " R29,34,39,65
19	10-5822	1	" " " " 8.2K " R82
20	19-315502	2	TRIMPOT, 5K OHM R83,88
21	19-315254	2	TRIMPOT, 250K OHM R52,56
22	19-8D9W2P0	1	RES, WIREWOUND 2OW, ? OHM R89

Figure 5-9 Canyon Bomber PCB Assembly Parts List PROM Version

ATARI®

Item	Part Number	Qty.	Description			
23	10-5333	4	RES, CARBON, ¼W, 5% 33K	OHM		R73,76,60,66
24	19-315104	2	TRIMPOT,100K OHM			R59,69
25	24-250505	1	CAP,ELECTROLYTIC	5uf	25V	C51
26	24-250226	2	" "	??uf	"	C38,39
27	24-250227	1	" "	220uf	"	C35
28	24-250108	2	" "	1000uf	"	C66,67
29	24-250478	1	" "	4700uf	"	C65
30	24-250105	2	" "	1uf	"	C36,37
31						
32	27-250102	2	CAP, CERAMIC DISC	.001uf	"	C64,69
33	27-250103	6	" " "	.01uf	"	C41,42,44,45, 53,62
34	27-250104	45	" " "	.1uf	"	C1-23,25-34 40,43,46-48 52,55-59,61,63,70
35	27-250224	1	" " "	.22uf	"	C68
36						
37						
38	28-101101	1	CAP DIPPED MICA,	100pf	100V	C24
39	28-101221	2	CAP DIPPED MICA,	220pf	100V	C54,60
40	21-101103	2	CAP,MYLAR,.01uf,100V			C49,50
41						
42						
43	31-A14F	2	DIODE A14F			CR7,8
44	31-1N914	6	DIODE, 1N914			CR1-6
45						
46						
47						
48	33-2N3644	2	TRANSISTOR, 2N3644			Q1,2
49	34-2N3643	4	TRANSISTOR, 2N3643			Q3-6
50						
51						
52						
53	37-7400	2	INTEGRATED CIRCUIT		7400	A6,L9
54	37-7402	1	" "		7402	K7
55	37-7404	2	" "		7404	E4,B7

Item	Part Number	Qty.	Description		
56	37-7408	2	INTEGRATED CIRCUIT	7408	C8,A9
57	37-7410	1	" "	7410	J4
58	37-7414	1	" "	7414	J9
59	37-7420	4	" "	7420	L3,L4,B6,K9
60	37-7430	1	" "	7430	K4
61	37-7432	5	" "	7432	F5,D6,L8,M8.P9
62	37-7437	1	" "	7437	C5
63	37-7474	4	" "	7474	H4,J7,R9 ,F4
64	37-74LS00	1	" "	74LS00	B5
65	37-7483	2	" "	7483	H5,K5
66	37-7486	3	" "	7486	J5,L5,D8
67	37-7490	1	" "	7490	C4
68	37-7492	2	" "	7492	D9,F9
69	37-74151	1	" "	74151	J8
70	37-74153	2	" "	74153	H7,K8
71	37-74LS163	8	" "	74LS163	M3,N3,P3,R3,M4 N4,P4,R4
72	37-74164	2	" "	74164	A7,B8
73	37-74165	8	" "	74165	M6,N6,P6,R6,M7 N7,P7,R7
74	37-74174	3	" "	74174	J3,K3,C6
75	37-74175	4	" "	74175	L6,A8,E8,F8
76	37-74195	1		74195	N9
77	37-9301	2	" "	9301	F6,M9
78	37-9316	5	" "	9316	D5,E5,H6,K6,L7
79	37-9321	2	" "	9321	E6,P8
80	37-9322	5	" "	9322	D2,E2,F2,P5,R5
81	37-9334	1		9334	C7
82	37-8T28	2	" "	8T28	B4,D4
83	37-8T97	6	" "	8T97	A2,B2,C2,F3,H3 H8
84	37-555	4	" "	555	B9,C9,E9,H9
85	37-TDA1004	2	AUDIO AMP	TDA1004	A/B11,C11
86	37-LM323	1	REGULATOR	LM323	
87					
88					
89					

Figure 5-9 Canyon Bomber PCB Assembly Parts List PROM Version

ATARI®

Item	Part Number	Qty.	Description
90	52-004	6	JUMPER .30 CENTERS
91	??-003	1	JUMPER .60 CENTER
92			
93			
94	62-001	1	SWITCH,SPST, MOMENTARY SW2
95	66-118PIT	1	SWITCH,SPST X8, DIP SW1
96			
97			
98			
99	72-1608C	2	SCREWS, PAN HD PHIL,#6-32 x ¼ lg, cres
100	75-016	2	WASHER, FLAT, #6
101	75-056	2	WASHER, LOCK, INT STR#6
102	75-916C	2	NUT,HEX, # 6-32
103			
104			
105			
106	78-06001	1	HEATSINK (LM323)
107	00947Q-01	2	HEATSINK (TDA1004)
108	78-13016	AR	CEMENT (TDA1004 HEATSINK)
109	78-16005	1	SILPAD (LM323)
110			
111			
112			
113	79-42040	1	SOCKET, 40 PIN, MED INSERTION C3
114			
115			
116			
117	90-102	1	CRYSTAL, 12.096 MHz Y1
118			
119			
120			
121	90-6010	1	INTEGRATED CIRCUIT C3
122	90-7013	2	RAM,2111 D7,E7
123	90-7020	8	RAM,2112Q2A H2,J2,K2,L2,M2 N2,P2,R2
124			
125			
126			
127	009491	1	CANYON BOMBER SYNC PROM J6
128	009492	1	CANYON BOMBER GRAPHICS PROM N8
129	009505	1	CANYON BOMBER PICTURE PROM LSB N5
130	009506	1	CANYON BOMBER PICTURE PROM MSB M5
131			
132			
133			
134	009497	1	CANYON BOMBER PROGRAM PROM 1 L1
135	009498	1	" " " " 2 K1
136	009499	1	" " " " 3 J1
137	009500	1	" " " " 4 H1
138	009501	1	" " " " 5 M1
139	009502	1	" " " " 6 N1
140	009503	1	" " " " 7 P1
141	009504	1	" " " " 8 R1

A Warner Communications Company

Figure 5-9 Canyon Bomber PCB Assembly Parts List ROM Version

Item	Part Number	Qty.	Description
1	008313-01	1	P.C. BOARD
2	10-5101	2	RES. CARBON, 5%, ¼W, 100 OHM R16,17
3	10-5102	13	" " " " 1K " R1,2,4,7,26 40,61,63,67 68,80,90,91
4	10-5103	35	" " " " 10K " R8-15,18-25 27,28,45-48 50,51,53,54 57,58,70-72 84,86,75,78
5	10-5104	2	" " " " 100K " R74,77
6	10-5105	2	" " " " 1M " R30,37
7	10-5182	3	" " " " 1.8K " R41,43,44
8			
9	10-5222	1	" " " " 2.2K " R79
10	10-5224	2	" " " " 220K " R33,36
11	10-5225	2	" " " " 2.2M " R31,38
12	10-5331	3	" " " " 330 " R3,6,42
13	10-5392	1	" " " " 3.9K " R81
14	10-5335	2	" " " " 3.3M " R49,55
15	10-5471	1	" " " " 470 " R5
16	10-5474	2	" " " " 470K " R32,35
17	10-5562	2	" " " " 5.6K " R62,64
18	10-5683	4	" " " " 68K " R29,34,39,65
19	10-5822	1	" " " " 8.2K " R82
20	19-315502	2	TRIMPOT, 5K OHM R83,88
21	19-315254	2	TRIMPOT, 250K OHM R52,56
22	19-8D9W2P0	1	RES, WIREWOUND 20W, 2 OHM R89

A Warner Communications Company

Figure 5-9 Canyon Bomber PCB Assembly Parts List ROM Version

ATARI®

Item	Part Number	Qty.	Description		
23	10-5333	4	RES, CARBON, ¼W, 5% 33K	OHM	R73,76 ,60,66
24	19-315104	2	TRIMPOT, 100K	OHM	R59,69
25	24-250505	1	CAP,ELECTROLYTIC 5uf	25V	C51
26	24-250226	2	" " 22uf	"	C38,39
27	24-250227	1	" " 220uf	"	C35
28	24-250108	2	" " 1000uf	"	C66,67
29	24-250478	1	" " 4700uf	"	C65
30	24-250105	2	" " 1uf	"	C36,37
31					
32	27-250102	2	CAP, CERAMIC DISC .001uf	"	C64,69
33	27-250103	6	" " " .01uf	"	C41,42,44,45, 53,62
34	27-250104	45	" " " .1uf	"	C1-23,25-34 40,43,46-48 52,55-59,61,63,70
35	27-250224	1	" " " .22uf	"	C68
36					
37					
38	28-101101	1	CAP DIPPED MICA, 100pf	100V	C24
39	28-101221	2	CAP DIPPED MICA, 220pf	100V	C54,60
40	21-101103	2	CAP, MYLAR, .01uf, 100V		C49,50
41					
42					
43	31-A14F	2	DIODE A14F		CR7,8
44	31-1N914	6	DIODE, 1N914		CR1-6
45					
46					
47					
48	33-2N3644	2	TRANSISTOR, 2N3644		Q1,2
49	34-2N3643	4	TRANSISTOR, 2N3643		Q3-6
50					
51					
52					
53	37-7400	2	INTEGRATED CIRCUIT	7400	A6,L9
54	37-7402	1	" "	7402	K7
55	37-7404	2	" "	7404	E4,B7

Item	Part Number	Qty.	Description		
56	37-7408	2	INTEGRATED CIRCUIT	7408	C8,A9
57	37-7410	1	" "	7410	J4
58	37-7414	1	" "	7414	J9
59	37-7420	4	" "	7420	L3,L4,B6,K9
60	37-7430	1	" "	7430	K4
61	37-7432	5	" "	7432	F5,D6,L8,M8.P9
62	37-7437	1	" "	7437	C5
63	37-7474	4	" "	7474	H4,J7,R9 ,F4
64	37-74LS00	1	" "	74LS00	B5
65	37-7483	2	" "	7483	H5,K5
66	37-7486	3	" "	7486	J5,L5,D8
67	37-7490	1	" "	7490	C4
68	37-7492	2	" "	7492	D9,F9
69	37-74151	1	" "	74151	J8
70	37-74153	2	" "	74153	H7,K8
71	37-74LS163	8	" "	74LS163	M3,N3,P3,R3,M4 N4,P4,R4
72	37-74164	2	" "	74164	A7,B8
73	37-74165	8	" "	74165	M6,N6,P6,R6,M7 N7,P7,R7
74	37-74174	3	" "	74174	J3,K3,C6
75	37-74175	4	" "	74175	L6,A8,E8,F8
76	37-74195	1		74195	N9
77	37-9301	2	" "	9301	F6,M9
78	37-9316	5	" "	9316	D5,E5,H6,K6,L7
79	37-9321	2	" "	9321	E6,P8
80	37-9322	5	" "	9322	D2,E2,F2,P5,R5
81	37-9334	1		9334	C7
82	37-8T28	2	" "	8T28	B4,D4
83	37-8T97	6	" "	8T97	A2,B2,C2,F3,H3 H8
84	37-555	4	" "	555	B9,C9,E9,H9
85	37-TDA1004	2	AUDIO AMP	TDA1004	A/B11,C11
86	37-LM323	1	REGULATOR	LM323	
87					
88					
89					

Figure 5-9 Canyon Bomber PCB Assembly Parts List ROM Version

ATARI®

Item	Part Number	Qty.	Description
90	52-004	6	JUMPER .30 CENTERS
91	52-003	1	JUMPER .60 CENTER
92			
93			
94	62-001	1	SWITCH,SPST, MOMENTARY SW2
95	66-11BPIT	1	SWITCH,SPST X8, DIP SW1
96			
97			
98			
99	72-1608C	2	SCREWS, PAN HD PHIL,#6-32 x ½ lg, cres
100	75-016	2	WASHER, FLAT, #6
101	75-056	2	WASHER, LOCK, INT STAR#6
102	75-916C	2	NUT,HEX, # 6-32
103			
104			
105			
106	78-06001	1	HEATSINK (LM323)
107	009470-01	2	HEATSINK (TDA1004)
108	78-13016	AR	CEMENT (TDA1004 HEATSINK)
109	78-16005	1	SILPAD (LM323)
110			
111			
112			
113	79-42040	1	SOCKET, 40 PIN, MED INSERTION C3
114			
115			
116			
117	90-102	1	CRYSTAL, 12.096 MH2 Y1
118			
119			
120			
121	90-6010	1	INTEGRATED CIRCUIT C3
122	90-7013	2	RAM,2111 D7,E7
123	90-7020	8	RAM,2LL02A H2,J2,K2,L2,M2 N2,P2,R2
124			

Item	Part Number	Qty.	DESCRIPTION
125			
126			
127	009491	1	CANYON BOMBER SYNC PROM J6
128	009492	1	CANYON BOMBER GRAPHICS PROM N8
129	009505	1	CANYON BOMBER PICTURE PROM LSB N5
130	009506	1	CANYON BOMBER PICTURE PROM MSB M5
131			
132			
133			
134			
135			
136	009495	1	CANYON BOMBER PROGRAM ROM 3 C1
137	009496	1	" " " 4 D1

A Warner Communications Company

TM-097
2nd PRINTING

YOUR COMMENTS, PLEASE!

Your comments will assist Atari in improving the usefulness of our publications. They are an important part of preparing for revisions of manuals and parts catalogs. No postage stamp is necessary if mailed in the U.S.A.

If you have any technical questions about certain Atari or Kee Games products, or are requesting additional publications, we will immediately forward your note to the appropriate person.

Page: **Comments:**

Cut along this line

Fill in if you wish a reply:

Name _____ Firm _____ ☐ Distributor
☐ Operator
Address _____ ☐ Other _____

City _____ State _____ Zip _____

First Fold

First Class
Permit #1004
Sunnyvale, CA

BUSINESS REPLY MAIL
No postage stamp necessary if mailed in the U.S.A.

Atari, Inc.
P.O. Box 9027
Sunnyvale, California 94086

Attn.: Publications Group, Coin-Op Engineering

Cut along this line

Second Fold

Atari, Inc.
P.O. Box 9027
Sunnyvale, CA 94086

Tape This Edge

WARRANTY

Seller warrants that its printed circuit boards and parts thereon are free from defects in material and workmanship under normal use and service for a period of ninety (90) days from date of shipment. Seller warrants that its television monitors (in games supplied with monitors) are free from defects in material and workmanship under normal use and service for a period of thirty (30) days from date of shipment. None of the Seller's other products or parts thereof are warranted.

If the products described in this manual fail to conform to this warranty, Sellers' sole liability shall be, at its option, to repair, replace, or credit Buyer's account for such products which are returned to Seller during said warranty period, provided:

(a) Seller is promptly notified in writing upon discovery by Buyer that said products are defective;

(b) Such products are returned prepaid to Sellers' plant; and

(c) Seller's examination of said products discloses to Seller's satisfaction that such alleged defects existed and were not caused by accident, misuse, neglect, alteration, improper repair, installation or improper testing.

In no event shall Seller be liable for loss of profits, loss of use, incidental or consequential damages.

EXCEPT FOR ANY EXPRESS WARRANTY SET FORTH IN A WRITTEN CONTRACT BETWEEN SELLER AND BUYER WHICH CONTRACT SUPERSEDES THE TERMS OF THIS ORDER, THIS WARRANTY IS EXPRESSED IN LIEU OF ALL OTHER WARRANTIES EXPRESSED OR IMPLIED, INCLUDING THE IMPLIED WARRANTIES OF MERCHANTABILITY AND FITNESS FOR A PARTICULAR PURPOSE, AND OF ALL OTHER OBLIGATIONS OR LIABILITIES ON THE SELLER'S PART, AND IT NEITHER ASSUMES NOR AUTHORIZES ANY OTHER PERSON TO ASSUME FOR THE SELLER ANY OTHER LIABILITIES IN CONNECTION WITH THE SALE OF PRODUCTS UNDER THIS ORDER.

This document is and contains confidential trade secret information of Atari, Inc.

This document is loaned under confidential custody for the sole purpose of operation, maintenance or repair of Atari equipment and may not be used by or disclosed to any person for any other purpose whatever, and remains the property of Atari, Inc.

Neither it nor the information it contains may be reproduced, used, or disclosed to persons not having a need to know consistent with the purpose of the loan, without written consent of Atari, Inc.

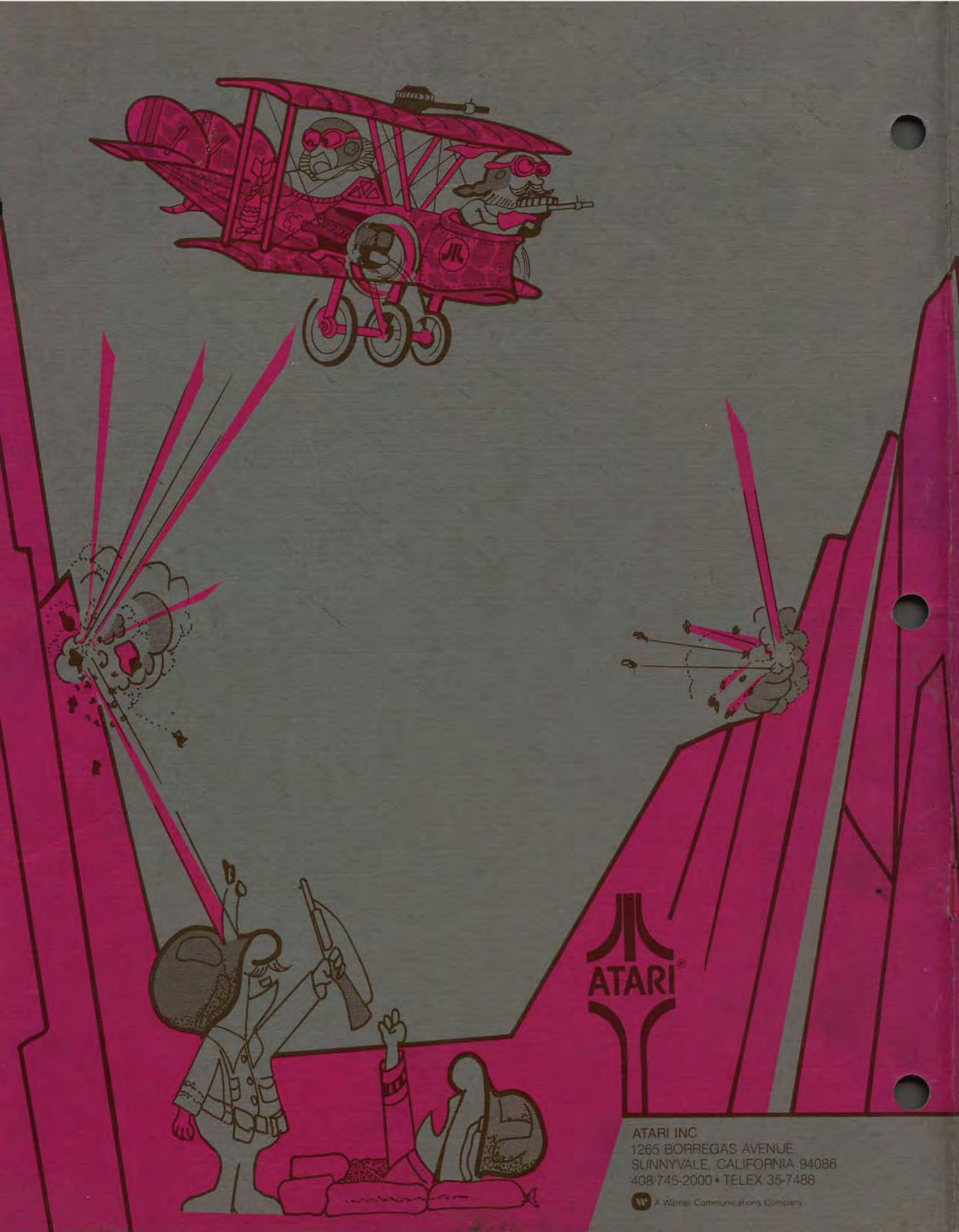

ATARI®

ATARI INC
1265 BORREGAS AVENUE
SUNNYVALE, CALIFORNIA 94086
408/745-2000 • TELEX 35-7488

A Warner Communications Company